THIS FILE IS MADE AVAILABLE THROUGH THE DECLASSIFICATION EFFORTS AND RESEARCH OF:

THE BLACK VAULT

THE BLACK VAULT IS THE LARGEST ONLINE FREEDOM OF INFORMATION ACT / GOVERNMENT RECORD CLEARING HOUSE IN THE WORLD. THE RESEARCH EFFORTS HERE ARE RESPONSIBLE FOR THE DECLASSIFICATION OF THOUSANDS OF DOCUMENTS THROUGHOUT THE U.S. GOVERNMENT, AND ALL CAN BE DOWNLOADED BY VISITING:

HTTP://WWW.BLACKVAULT.COM

YOU ARE ENCOURAGED TO FORWARD THIS DOCUMENT TO YOUR FRIENDS, BUT PLEASE KEEP THIS IDENTIFYING IMAGE AT THE TOP OF THE .PDF SO OTHERS CAN DOWNLOAD MORE!

91-F01-0754

[redacted] UNCLASSIFIED

TECHNICAL PAPER
RAC-TP-354

JUNE 1969

RESEARCH ANALYSIS CORPORATION

AD 502694

US Army Special Forces and Similar Internal Defense Advisory Operations in Mainland Southeast Asia, 1962-1967 (U)

EXCISED UNDER THE PROVISIONS OF THE FREEDOM OF INFORMATION ACT 5USC552

(b)

UNCLASSIFIED
D

by
Paul S. Ello
Richard P. Joyce
Robert H. Williams
William Woodworth

THIS DOCUMENT IS DECLASSIFIED
TO: UNCLASSIFIED
Per Director DARPA, STO/TIO
22 July 1992

PREPARED FOR THE DEPARTMENT OF THE ARMY
Contract No.
DAHC19-69-C-0017

GROUP 3
DOWNGRADED AT 12-YEAR INTERVALS; NOT AUTOMATICALLY DECLASSIFIED

SPECIAL HANDLING, NOT RELEASABLE TO FOREIGN NATIONALS, BY AUTHORITY OF US ARMY COMBAT DEVELOPMENTS COMMAND ATTENTION: ASDC-C, FT. BRAGG, N. C., 8 JAN 69

RAC

DISTRIBUTION STATEMENT
In addition to security requirements which apply to this document and must be met, each transmittal outside the Department of Defense must have prior approval of United States Army Combat Developments Command (ATTN: ASDC-C), Fort Bragg, North Carolina 28307.

[redacted]

Copy [redacted] of 100
RAC Log No. 135693

#438

SECURITY MARKING

The classified or limited status of this report applies to each page, unless otherwise marked.
Separate page printouts MUST be marked accordingly.

THIS DOCUMENT CONTAINS INFORMATION AFFECTING THE NATIONAL DEFENSE OF THE UNITED STATES WITHIN THE MEANING OF THE ESPIONAGE LAWS, TITLE 18, U.S.C., SECTIONS 793 AND 794. THE TRANSMISSION OR THE REVELATION OF ITS CONTENTS IN ANY MANNER TO AN UNAUTHORIZED PERSON IS PROHIBITED BY LAW.

NOTICE: When government or other drawings, specifications or other data are used for any purpose other than in connection with a definitely related government procurement operation, the U.S. Government thereby incurs no responsibility, nor any obligation whatsoever; and the fact that the Government may have formulated, furnished, or in any way supplied the said drawings, specifications, or other data is not to be regarded by implication or otherwise as in any manner licensing the holder or any other person or corporation, or conveying any rights or permission to manufacture, use or sell any patented invention that may in any way be related thereto.

AD- 502694

SECURITY REMARKING REQUIREMENTS

DOD 5200.1-R, DEC 78

REVIEW ON 28 JUN 89

1 OF 4

AD502694L

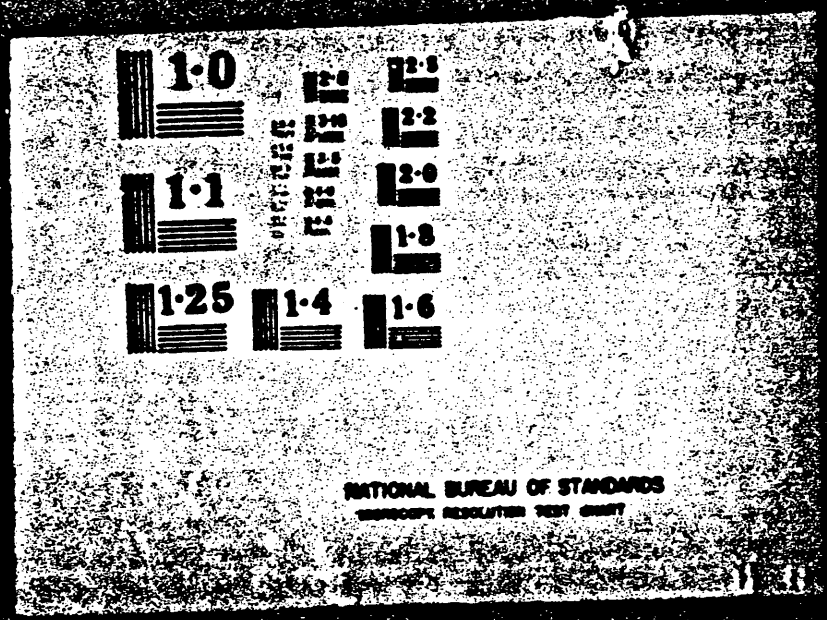

91-F01-0754

to Army for review

[redacted]

AD 502694

Technical Report

distributed by

UNCLASSIFIED

DEFENSE TECHNICAL INFORMATION CENTER

THIS DOCUMENT HAS BEEN CLASSIFIED AND
TO UNCLASSIFIED
Per Director, DARPA SEIO/TIO
28 July 1992

DTIC Acquiring Information – Imparting Knowledge

Defense Logistics Agency
Defense Technical Information Center
Cameron Station
Alexandria, Virginia 22304-6145

UNCLASSIFIED

[redacted]

CONFIDENTIAL

Policy on the Redistribution of DTIC-Supplied Information

As a condition for obtaining DTIC services, all information received from DTIC that is not clearly marked for public release will be used only to bid or perform work under a U.S. Government contract or grant or for purposes specifically authorized by the U.S. Government agency that is sponsoring access. Further, the information will not be published for profit or in any manner offered for sale.

Non-compliance may result in termination of access and a requirement to return all information obtained from DTIC.

NOTICE

We are pleased to supply this document in response to your request.

The acquisition of technical reports, notes, memorandums, etc., is an active, ongoing program at the **Defense Technical Information Center (DTIC)** that depends, in part, on the efforts and interest of users and contributors.

Therefore, if you know of the existence of any significant reports, etc., that are not in the **DTIC** collection, we would appreciate receiving copies or information related to their sources and availability.

The appropriate regulations are Department of Defense Directive 3200.12, DoD Scientific and Technical Information Program; Department of Defense Directive 5230.24, Distribution Statements on Technical Documents; American National Standard Institute *(ANSI)* Standard Z39.18-1987, Scientific and Technical Reports - Organization, Preparation, and Production; Department of Defense 5200.1-R, Information Security Program Regulation.

Our Acquisition Section, **DTIC-FDAB**, will assist in resolving any questions you may have concerning documents to be submitted. Telephone numbers for that office are **(202) 274-6847**, or Autovon **284-6847**. The Reference Services Section, **DTIC-FDRA**, will assist in document identification, ordering and related questions. Telephone numbers for that office are **(202) 274-7633** or Autovon **284-7633**.

DO NOT RETURN THIS DOCUMENT TO DTIC

EACH ACTIVITY IS RESPONSIBLE FOR DESTRUCTION OF THIS DOCUMENT ACCORDING TO APPLICABLE REGULATIONS.

CONFIDENTIAL

S[redacted]

UNCLASSIFIED

DISTRIBUTION STATEMENT
In addition to security requirements which apply to this document and must be met, each transmittal outside the Department of Defense must have prior approval of United States Army Combat Developments Command (ATTN: ISSO-CI, Fort Bragg, North Carolina 28307.

UNCONVENTIONAL WARFARE DEPARTMENT
TECHNICAL PAPER RAC-TP-354
Published June 1969

US Army Special Forces and Similar Internal Defense Advisory Operations in Mainland Southeast Asia, 1962-1967 (U)

by
Paul S. Ello
Richard P. Joyce
Robert H. Williams
William Woodworth

RAC Research Analysis Corporation
McLean, Virginia

[redacted]

UNCLASSIFIED

SECRET

UNCLASSIFIED

The contents of RAC publications, including the conclusions, represent the views of RAC and should not be considered as having official Department of the Army approval, either expressed or implied.

~~This document contains information affecting the national defense of the United States within the meaning of the Espionage Laws, Title 18, U. S. C., Sections 793 and 794. The transmission or the revelation of its contents in any manner to an unauthorized person is prohibited by law.~~

SECRET

UNCLASSIFIED

PRECEDING PAGE BLANK - NOT FILMED

UNCLASSIFIED

FOREWORD

This study of US Army Special Forces operations in mainland Southeast Asia was prepared for the US Army Combat Developments Command. It was undertaken as part of a continuing program of research by the RAC Unconventional Warfare Department on problems of internal defense and internal development in developing countries.

Research for this study was conducted in the spring of 1967. Most of the data were gathered in the field at Special Forces camps and parent headquarters in Vietnam and Thailand.

The authors gratefully acknowledge the assistance provided by the officers and men of Special Forces, other Army commands, and the other services in the search for data, because without their help the study could not have been accomplished. The authors of course assume full responsibility for the study and its conclusions. They hope that the work will serve its purpose: guidance for future US Army efforts to advise and assist the ground forces of developing countries to meet the challenges of internal defense and internal development.

John M. Breit
Head, Unconventional Warfare Department

UNCLASSIFIED

RAC
[redacted]

PRECEDING PAGE BLANK - NOT FILMED

CONTENTS

Foreword iii

Summary 1

Problem—Facts—Discussion—Conclusions

Abbreviations 12

1. Introduction to the Study 15

Purpose of the Study (15)—Scope (16)—Research Effort (16)—Organization of the Report (17)

PART I

US Army Special Forces Operations and Activities in Vietnam, October 1964-June 1967

2. History of the Civilian Irregular Defense Groups Program, October 1964—June 1967 20

Group Status and Expansion (20)—Missions (23)—New and Improved Capabilities (30)—Command and Control (32)—Techniques and Developments (33)—Summary Comment (37)

3. Premission Training 38

The Program: An Overview (38)—The Consequences (39)—Summary Comment (41)

4. Command, Control, and Coordination 42

Under the Operational Control of the Corps Senior Advisers (42)—Command Section of 5th Special Forces Group, Airborne (45)—Coordination with VNSF Counterparts (52)—Exercise of Command, Control, and Coordination (57)

5. US Army Special Forces in the Sector and Subsector Advisory Roles 58

Origin (58)—Assignment of Sector and Subsector Missions to US Army Special Forces Detachments (60)—Sector/Subsector Advisory Operation (64)—Summary Comment (72)

6. Intelligence 75

The Mission: Changing Intelligence Requirements (75)—Intelligence Problems: Product and Process (78)—Effect of External Command Relations (81)—Materiel (82)—Implications (83)

7. Civilian Irregular Defense Groups Combat Operations 84

Before 1 October 1964 (84)—5 SFGA Operations before the US Buildup (86)—After Mid-1965: Impact of US Buildup (87)—Operational Problems and Responses (90)—Examples and Statistics (92)—Planning (98)—Summary Comment (99)

8. Special Operations 101

Requirements for Special Operations (101)—Types and Concepts of Special Operations (103)—Force Structures (104)—Operational Methods and Techniques (108)—Significant Operations and Results (113)—Problems (115)

9. Logistic Support 117

Situation in Late 1964 (117)—Significant New Developments (118)—Problems (126)—Summary Comment (127)

10. Communications 128

Situation in Late 1964 (128)—Modifications Introduced (129)—Personnel (130)—Scope of Special Forces Communications (131)—Future Plans (131)—Special Situations and Problems (133)—Other Problems (134)—Summary Comment (137)

11. Medical Activities 138

Missions (138)—New Developments and Emphases (138)—Problems and Special Situations (141)—Summary Comment (143)

12. Civic Action, Psychological Operations, and Revolutionary Development Support 145

The Mission (145)—Implementation of Civic Action/Psychological Operations (149)—Program Direction (151)—Summary Comment (157)

13. Conversion and Turnover 159

Definitions and Concept (159)—Early Attempts at Conversion and Turnover (159)—The Concept in 1967 (162)—Summary Comment (163)

PART II

US Army Special Forces Operations and Activities in Thailand, 1962-1967

14. Introduction to Part II 166

15. The Country, the People, and the Threat 167

Regions and People (167)—External Threat (168)—Internal Threat in the Northeast (168)—Internal Threat in the South (171)—Comparison of the Northeast and the South (173)

16. Thai Assets for Internal Defense 175

Provincial Governmental Structure (176)—Thai National Police Department (176)—Military Assets (179)—Summary Comment (183)

17. Thai Organization for Internal Defense 184

National Security Command (184)—Communist Suppression Operations Command (184)—Noncmilitary Programs (188)—Summary Comment (189)

18. US Army Internal Defense Advisory and Training Activities 191

Early US Internal Defense Training in Thailand (191)—US Army Special Forces Mobile Training Team, Det C-101-A (Prov) (192)—The 46th Special Forces Company in Thailand (195)—The 46th Special Forces Company in the Context of the US Counterinsurgency Advisory Effort in Thailand (202)—Summary Comment (206)

19. Problems and Solutions 207

The Master Problem (207)—US Army Special Forces Problems and Solutions (207)—Summary Comment (212)

PART III

Overview and Outlook in Southeast Asia

20. Overview and Outlook in Mainland Southeast Asia 214

Background (214)—Current Setting (215)—Outlook (215)

21. Summary Discussion 217

Premission Training and Deployment (217)—Command, Control, and Coordination (218)—Coequal Sector and Subsector Advisory Missions (220)—Intelligence (220)—Civilian Irregular Defense Groups Combat

Operations (222)—Special Operations (223)—Logistics (223)—Communications (223)—Medical (224)—Civic Action/Psychological Operations (225)—US Army Special Forces in Thailand (226)—Employment and Mission Priority (226)

Appendix

A. Program of Instruction for Mobile Strike Forces 229

References and Notes 233

Cited References and Notes (233)—Additional References (234)

Figures

1. 5 SFGA, Vietnam: Detachment Locations, 15 December 1964 21
2. 5 SFGA, Vietnam: Detachment Locations, 31 August 1967 28
3. ARVN Command Structure, June 1967 46
4. 5 SFGA Command Structure, June 1967 47
5. VNSF Command Structure, June 1967 48
6. CIDG Program: Command and Control in II CTZ 49
7. Organization of an SFOB, 1961 51
8. Organization of an SFOB, 1963 51
9. Organization of 5 SFGA, FY67 51
10. Command of MACV/USASF Advisory Teams in the CTZ: The A Detachment in the Dual Role 66
11. Command of MACV/USASF Advisory Teams in the CTZ: The B Detachment in the Dual Role 67
12. Kien Phong Province and Adjacent Areas 71
13. Type Mobile Strike Force Organization 106
14. S4 Organization, Co B, Pleiku 119
15. Special Forces Group S4 Section 120
16. Surface Movement of Supplies to FSPs 121
17. Trang Phuc Fighting Camp, Ban Don, Darlac Province 125
18. Insurgency in Northeast Thailand 169
19. Thailand Peninsula: Areas of CTO Activity 172
20. Organization of the TNPD 177
21. Thailand: PP Regions and BPP Areas 178
22. Thailand: RTA Unit Dispositions, 1 July 1967 180
23. CSOC System, Northeast Thailand 186
24. Det C-101-A (Prov)/RTASF Organization 194
25. Det C-101-A (Prov) Relations within USMACTHAI 194
26. Basic Organization and Permanent Campsites of 46th SF Co 198
27. Organization of 46th SF Co, July 1967 204
28. MACTHAI/JUSMAG Command Structure 206

Tables

1. Expansion of 5 SFGA and Span of Advisory Operations 24
2. Comparison of MACV and USASF Teams 63
3. 5 SFGA Operational Statistics, 1 May–31 July 1967 96
4. Disparity between I and II CTZs in Company-Sized and Larger Operations per Camp per Week, 1 May–31 July 1967 97
5. Relation between MIKE Force Strength and Number of Operations per Camp per Week, 1 May–31 July 1967 97
6. Combat Efficiency as a Function of KIA per Contact 97

7. 5 SFGA Special Operations Operational Summary, Long-Range Reconnaissance and Mobile Strike Missions, July 1966–March 1967 114
8. RTA Troops Available for Counterinsurgency Operations in Northeast and South Thailand, July 1967 181
9. RTA Manning Levels, September 1966 182
10. VDC Authorized Strength, Mid-1967 183
11. Training Programs of the 46th SF Co 199
12. 46th SF Co Unit Designation and Reporting List, 1 April 1967 203

SUMMARY

Problem

(U) To reconstruct and analyze the operational experience of US Army Special Forces (USASF) and other similar advisory detachments assigned to train, advise, assist, and support internal defense forces in mainland Southeast Asia in order to extract lessons applicable to planning, training, and the development of doctrine for future operations of a similar nature.

Facts

(U) ~~(S)~~ US Military Assistance Programs for the developing nations of mainland Southeast Asia (and elsewhere) had as their original object the development of balanced conventional forces in the US image to defend against overt external aggression. Between 1959 and 1962, when events in Laos and the Republic of Vietnam clearly indicated that covert aggression was the primary threat, the US government began to understand the key role of indigenous police and paramilitary forces in countering an externally supported communist attack from within. Since 1959, in an atmosphere of expanding insurgency, USASF detachments have been continuously employed in Southeast Asia in the forefront of a variety of US training and advisory missions:

(a) Laos, 1959-1962: in training regular army units and accompanying them as advisers on combat operations; in helping to develop the Hill Tribe potential into paramilitary assets.

(b) Vietnam, 1961- : in exploiting as advisers to Vietnamese Special Forces (VNSF) the paramilitary potential of the Montagnards and other ethnic and religious minorities in remote and insecure districts through the Civilian Irregular Defense Groups (CIDG) program and organizing special operations units to service the needs of US field forces.

(c) Thailand, 1960- : in training components of the Thai National Police and the Royal Thai Army (RTA) in counterguerrilla and special operations.

Discussion

(U) This study reviews and analyzes the activities and utilization of USASF in Vietnam from October 1964 to mid-1967 and in Thailand from 1962

UNCLASSIFIED

UNCLASSIFIED

SUMMARY

to 1967. The study constitutes a follow on to two previous RAC studies of Special Forces operations in Laos and Vietnam and appraises at a low level of classification the most recent experience in the light of the regional war that is in fact being waged in mainland Southeast Asia by communist forces.

(U) In Vietnam the Special Forces' task since 1964 has been essentially operational in the environment of an active insurgency that in terms of the US commitment escalated from Type II to Type I low-intensity conflict and from the Viet Cong (VC) North Vietnamese Army (NVA) aspect from sustained guerrilla operations to a combination of mobile and guerrilla warfare. In Thailand, where insurgency in the Northeast was incipient until 1966, the Special Forces' task has been to train Thai units in counterguerrilla operations and to establish and maintain in readiness what is essentially a Combined Special Forces Operational Base (CSFOB) despite its designation as a Combined Special Forces Training Base (CSFTB).

The 5th Special Forces Group in Vietnam

(U) With the redesignation of US Army Special Forces, Vietnam (USASFV) as the 5th Special Forces Group, Airborne (5 SFGA) in October 1964, USASFV became a group in fact as well as in name. C detachments and the table of organization and equipment (TOE) letter-company structure were introduced, and 12-month permanent change of station (PCS) on an individual-replacement basis superseded the earlier 6-month temporary duty (TDY) detachment rotation. The character of CIDG operations remained much the same, even when Military Assistance Command, Vietnam (MACV), in the spring of 1965, assigned several B detachments and about half the A detachments a second coequal mission as advisers to Vietnamese sector and subsector commanders, respectively. The detachments adapted well to the new mission except in the case of A detachments whose controlling B detachment did not have the sector mission, in which case the A detachment commander had to report to two seniors who were charged with different missions and were without an immediate common superior.

(U) The growing US combat presence began to impact on 5 SFGA and the CIDG area development program in the third quarter of 1965. As US combat forces took the field in increasing numbers, first in I Corps Tactical Zone (CTZ), then in II and III CTZs, the MACV/Army of the Republic of Vietnam (ARVN)-advisory/command system that had controlled operations at corps level was subordinated to the US field commands by the simple but effective device of assigning the US force commanders in those CTZs additional duty as Corps Senior Advisers in the place of the incumbents, who became deputies. This was a key factor in diverting the thrust of CIDG camp strike force operations from the stated area development mission to serve the combat intelligence collection and operational needs of US combat units.

(U) The impact of the US combat presence on the nature of Special Forces operations was strongest in II and III CTZs, less strong in I CTZ, and

almost unfelt in IV CTZ. It was in direct proportion not only to US strength but also to the extent of the US combat force commitment throughout the CTZs. The net effect in II and III CTZs was to subordinate CIDG operations to the operations of divisions and separate brigades of I and II Field Forces, whereas in IV CTZ the CIDG program, although benefiting from the additional air and logistical support growing out of the US buildup, continued much as before.

(U) ~~(S)~~ Historically, Western armies campaigning in underdeveloped areas have recruited native auxiliaries that served a variety of purposes, including the vital informational link between the alien force and the inhabitants. USASFV in effect presented arriving US combat forces with indigenous assets that could partly fill this role. The situation was exploited by augmenting 5 SFGA with a large military intelligence detachment and establishing in each CTZ intelligence analysis centers that were tied into the countrywide MACV intelligence system. By the spring of 1967 about 42 percent of all MACV ground combat intelligence was originating with 5 SFGA. The local internal defense intelligence effort against the communist infrastructure in the tactical areas of operational responsibility (TAORs) of the CIDG camps (except in the Mekong Delta) suffered accordingly. There was also a tendency to redirect civic action (CA) and psychological operations (PSYOP) activities to serve military rather than nation-building purposes ("winning the hearts and minds") and as a cover for collecting intelligence from informants.

(U) During the period of the study, 5 SFGA expanded from authorized group strength in 1964 to some 2700 in mid-1967, but the shortage of USASF advisory personnel for expanding special operations requirements caused most A detachments in the CIDG camps to be understrength. The shift from detachment rotation to individual replacement and the necessity to accept younger and less experienced personnel for duty with Special Forces made for considerable contrast between the A detachment in Vietnam of 1964 and that of 1967. The 1967 detachment had less cohesion and less collective experience, and its officers were very young. They thought more in terms of conventional combat (killing VC), a perhaps natural concomitant of the US combat presence. The 1967 A detachment, however, was operating in the context of a more mature CIDG program. It had better indigenous assets and counterparts to work with and more air and reaction force support to enable it to carry out its missions.

The 46th Special Forces Company in Thailand

(U) ~~(C)~~ The Royal Thai government and the US Mission in Bangkok have been alert to the parallels between the development of insurgency in Thailand and the growth of the VC insurgency from 1958 to 1961. Special Forces mobile training teams (MTTs) from Okinawa had trained RTA and Border Patrol Police (BPP) for several years preceding 1966, but it was in March of that year that an MTT, Det 101-C-A(Prov), began a comprehensive program of joint training with RTA Special Forces (RTASF) detachments and initiated

planning for the training of RTA infantry units in counterguerrilla operations. The MTT was replaced in October by the 46th SF Co, which benefited greatly from the surmounting of difficulties, the training base developed, and the planning accomplished by its predecessor. The 46th SF Co was assigned a number of short-term special training tasks in temporary locations. Such assignments would probably continue, but the principal task of jointly conducting, with RTASF counterparts, counterguerrilla training for the infantry units of the RTA was accomplished at four permanent sites.

Mission and Employment: The Paradox

(U) USASF are now recognized as multipurpose, but they were originally organized and structured for the unconventional warfare mission in the context of general war. Since the latter has not occurred, the need for commitment under the mission has not arisen. Yet, because of their inherent capability, Special Forces have been employed for almost a decade in Southeast Asia in a counterinsurgency and advisory role—a role not considered when the organization was formed—that has involved combat operations.

Conclusions

(U) The assessment of Special Forces and other similar US Army operational and advisory experience in Vietnam and Thailand leads to the following conclusions.

DOCTRINE AND POLICY

(U) 1. Future doctrinal statements of Special Forces missions should take cognizance of the fact that since 1962 Special Forces have been operationally employed almost exclusively in internal defense and internal development assistance missions.

Experience in Southeast Asia shows that the methods and techniques of unconventional warfare are as applicable to low-intensity conflict as to general war. Low-intensity conflicts initiated by communist or communist-supported forces will most likely generate continuing requirements for Special Forces. Past experience and future prospects provide ample justification for recognition of the internal defense and internal development role of Special Forces in doctrine for special warfare.

(U) 2. The essential counterinsurgency task for host country and allied forces is security for the people.

In Vietnam US-supported Revolutionary Development (RD) and PSYOP programs have made some gains in the battle to win the hearts and minds of the people but have proved incapable of persuading them to inform on enemy troop-unit locations and the identity of local cadres, except when host country and allied forces have been

able to guarantee security against the depredations and terror of the enemy. Many PSYOP programs are ingenuous and pro forma. Unless the US Army can put expertly qualified personnel into uniform to conduct PSYOP in situations where communists are extending their control over a population whose culture is extrinsic to our own, favorable results will be incommensurate with the effort expended.

A wide discrepancy exists between what announced US policy concerning the job to be accomplished in counterinsurgency is and what that job in practical military fact consists of on the ground. US policy in Vietnam and Thailand has been to win the hearts and minds of the people and thereby to deny the subversive movements the bases of support they must have to win the struggle. Implicit in the slogan "win the hearts and minds" is the idea of nation building, a truly mammoth undertaking under the best of circumstances. To the men on the ground, however, the obvious first requirement is to establish security, and experience in Vietnam clearly shows that PSYOP, civic action, and RD support must be tailored to the security requirement. In the field, therefore, the policy of winning the hearts and minds translates into military civic action in furtherance of the security mission. Many hearts and minds have doubtless been won in both Vietnam and Northeast Thailand, but it appears possible to win the hearts and minds of a majority of the people and still lose the war, if security from enemy terror cannot be provided.

(U) 3. Gains in combat intelligence by 5 SFGA in Vietnam between 1965 and mid-1967 were achieved for the benefit of US combat units at the expense of the internal defense intelligence mission.

Before the deployment of US combat forces to Vietnam, Special Forces intelligence collection was directed at the local guerrillas and their political/military infrastructure. Arriving US forces found that conventional combat intelligence methods yielded very little and that Special Forces camps were the best sources of information on the enemy. MACV fully exploited the combat intelligence potential of Special Forces, but the needs of US field forces were met at the expense of the local internal defense intelligence mission. The implication of the experience is that, when an insurgency reaches the level of intensity that was reached in Vietnam in 1965 and a heavy requirement develops for USASF detachments and their indigenous assets to collect and process combat intelligence for US forces, it is essential that professionally qualified intelligence augmentation be provided to meet the new requirement and to continue undiminished the ongoing intelligence effort directed at the enemy infrastructure.

US ARMY SPECIAL FORCES IN VIETNAM

Civilian Irregular Defense Groups Program

(U) 4. Area development is a sound concept that can be pursued with worthwhile results even in Phase III insurgency.

The experience of 5 SFGA shows clearly that, as camps are opened in contested areas, people quickly gravitate to the shelter of their security perimeters, and as the security perimeters are pushed outward through camp strike force operations, "pacification" naturally results. In a Phase III insurgency environment, however, when the insurgents have reached the threshold of positional warfare, the area development mission cannot be undertaken in the absence of quick-reaction forces to respond to major attacks on the civilian irregulars by enemy main forces.

(U) 5. Comprehensive long-range planning should be initiated on an annual basis as soon as practicable by a Special Forces group with an internal defense and area development mission.

The introduction in 1966 of an annual planning cycle was a progressive step that furthered continuity of operations and more efficient management of assets of the CIDG program in conformance with overall US objectives in Vietnam. The annual Concept of Operations for the ensuing calendar year is prepared during the second quarter and submitted to Commander, US Military Assistance Command, Vietnam (COMUSMACV) early in the third quarter. This annual plan is responsive to MACV objectives and strategy and to the realistic goals perceived by the letter companies and operational detachments in the four CTZs in consultation with counterpart VNSF and ARVN corps commanders and their US advisers (the field-force commanders in I, II, and III CTZs). The annual Concept of Operations relates operations to objectives and the resources necessary to support operations to budgetary values.

Counterpart Relations

(U) ~~(C)~~ 6. Counterpart graft is best controlled through indirect measures.

Throughout the history of the CIDG program in Vietnam, Special Forces have had to contend with the problem of graft by counterparts—graft, that is, as judged by Western standards. This problem has many aspects—the clash of US and oriental value systems is one, and the quality of counterpart personnel as professional military men is another. Available evidence indicates that as the competence and calibre of counterpart VNSF personnel have been upgraded through advice and training, the problem of graft has diminished in size and importance. Nonetheless the problem remains. Experience shows that the quiet application of indirect controls, rather than the direct face-to-face challenge, enables both parties to remain in good rapport and to get on with the mission.

US Army Special Forces Premission Training and Deployment

(U) 7. The prestructured and team-trained detachment is necessary for initial deployment to a Vietnam-type internal defense and area development mission, but thereafter individual replacement is entirely practical.

Team integrity is a cherished concept among men who have devoted themselves to service in the Special Forces. In the earlier days of the Vietnam conflict, teams trained together, served their TDY tours together, and returned home together. It was alleged by some that the concept of teamwork (one for all and all for one), as much as the qualifications of the men, helped get the job done. The changeover to PCS in late 1964 and the attendant individual replacement system was initially feared for the deleterious impact it would have on mission accomplishment. The experience since 1964 shows that the periodic replacement of one or two men at a time in the workhorse A detachments in the CIDG camps has helped, rather than hindered, mission performance insofar as it has overcome the problem of earlier years when a carefully developed base of rapport with counterparts was suddenly shattered as each team finished its tour. The premission-formed and team-trained detachment nonetheless remains essential for unconventional warfare missions in time of general war and offers significant advantages for special operations in support of the internal-defense assistance program.

Command, Control, and Coordination

(U) 8. By any normal standard in mid-1967, the size of 5 SFGA, the breadth of its responsibilities, and the span of control from the demilitarized zone (DMZ) to Phu Quoc Island justified the assignment of a general officer to the post of commander.

(U) 9. Command arrangements should clearly designate the second in command.

Special Forces are flexibly organized and can more easily than conventional units tailor their command structure to the requirements of their missions and the number and ranks of available personnel. The various command organizational arrangements employed by Special Forces in Vietnam over the years have evidenced this flexibility. Whatever the organizational arrangements decided on, however, the second in command should be clearly designated as such.

(U) 10. Organizing the more highly specialized activities of a Special Forces group deployed in an internal-defense assistance role into a separate letter company is a sound practice.

In the largest frame of reference, all Special Forces operations are special in nature, but experience shows some to be more special than others. The grouping of the more specialized activities of 5 SFGA into a separate provisional letter company in early 1967 facilitated the command administration and support of the activities and the personnel assigned to them and served especially to further the maintenance of the special security arrangements that attend sensitive programs.

(U) 11. Young A detachment officers are sometimes outmaneuvered by senior noncommissioned officers (NCOs) in the exercise of command.

Special Forces normally seek to post only senior captains and lieutenants to A detachments as commanders and executive officers. The exigencies of Vietnam since 1965 have had an Army-wide impact on officer resources, and young captains and lieutenants have necessarily been assigned to A detachments. Young officers who lack experience and maturity find it difficult to establish and maintain discipline within detachments composed of senior NCOs with many years of experience in Special Forces and multiple tours in Vietnam. Because of their experience and contacts, senior NCOs can make it difficult for newly arrived officers to assert their authority.

Sector and Subsector Role

(U) 12. Special Forces should avoid accepting a dual role under two commanders.

The outstanding performance of Special Forces in the sector and subsector advisory role again demonstrated their versatility and adaptability, but A detachments should not be put in a position of having to report to their control detachment for their Special Forces mission and to a non-Special Forces commander for another coequal mission.

SUMMARY

(U) 13. Where CIDG and Regional Forces (RF)/Popular Forces (PF) efforts were combined through B detachments in a sector role, the result was improved efficiency of combat operations, intelligence collection and analysis, administration, and logistics.

(U) 14. When, in the sector and subsector roles, Special Forces have established adequate security and programs are operating smoothly, Special Forces should be promptly replaced by MACV advisory teams.

Special Forces are a valuable asset capable of performing many types of missions. What they can do well is not, however, the test of what they should do, if the Army is to benefit to the fullest from their potential.

Intelligence

(U) 15. After 1965, USASFV became the major source of ground combat intelligence support for US combat troops.

By mid-1967 Special Forces, by MACV estimate, were producing 42 percent of all ground combat intelligence acquired by MACV.

(U) ~~(C)~~ 16. Despite the excellence of their effort, both Special Forces and their professional intelligence augmentation personnel need improved training in the purposes, methods, techniques, and procedures of the internal defense intelligence mission.

Operations and Special Operations

(U) 17. In future CIDG-type programs, Special Forces must expect an ancillary role for their irregulars when the conflict attains Type I low-intensity proportions and significant numbers of US combat forces become engaged.

Pressures by the conventional forces to avail themselves of the services of the irregulars will quickly develop. Lest the irregular effort collapse, Special Forces must work to retain the organizational integrity of the program and the irregular units that sustain it.

(U) ~~(C)~~ 18. Highly trained irregular light-infantry units are ideally suited for long-range reconnaissance and harassment and interdiction missions in enemy-controlled territory.

Since 1964, as the CIDG program has matured, a substantial number of highly trained irregular units have been created for special operations. These units have proved themselves ideally suited to perform long-range reconnaissance and to conduct harassment and interdiction operations in enemy-controlled areas for periods in excess of 30 days. Such missions are not what conventionally organized combat forces are normally prepared to undertake. So useful have the CIDG forces been in locating the enemy for allied ground and air forces, that a possible future role for Special Forces will be to recruit, train, and operationally support and assist indigenous light-infantry irregulars to gather intelligence and locate enemy units in future Type I low-intensity conflicts in developing countries.

(U) 19. The platoon-sized multipatrol reconnaissance pattern of CIDG forces is more productive in locating the enemy than the single company-sized patrol.

Application of the multipatrol pattern can, however, be made only in the context of the availability of an adequate air and ground force reaction capability.

(U) 20. Reporting by 5 SFGA of off-site operations in terms of platoon and company days of operations would have more accurately reflected the intensity of the effort and would have permitted meaningful analysis of the effectiveness of CIDG operations themselves and of CIDG operations in comparison with large conventional unit operations.

Logistics

(U) 21. The logistic support system for the CIDG program continued to function in an outstanding manner.

Communications

(U) 22. The expansion of effort and proliferation of equipment had led in mid-1967 to a situation wherein the Special Forces communications system would have benefited from a systems analysis to rationalize equipment types and eliminate unnecessary traffic.

Medical

(U) 23. In future CIDG-type programs, it should be ensured at the outset, by a US-host-country agreement if necessary, that adequate medical treatment will be provided to casualties among the irregulars.

Civic Action/Psychological Operations and Revolutionary Development Support

(U) ~~(S)~~ 24. The abuse of CA/PSYOP and RD support for intelligence purposes discredits the entire nation-building effort in the eyes of the people whose loyalties such programs are intended to win.

Intelligence personnel who most unprofessionally reveal their true interests when conducting civic action and PSYOP not only uncover themselves but in the process discredit the legitimate purposes of CA/PSYOP programs. It is one thing to view intelligence as an important by-product of CA/PSYOP/RD support programs. It is quite another to view such programs only as a necessary but intrinsically valueless cover for intelligence functions.

Conversion and Turnover

(U) 25. In sharp contrast to the earlier period, experience since 1964 clearly demonstrates that "turnover" can be successful when carefully planned and time-phased executed and when continued support is arranged.

SUMMARY

THAILAND

Role of US Army Special Forces

(U) ~~(C)~~ 26. The 46th SF Co is the principal US instrument for counterinsurgency training of the RTA.

By assigning a Special Forces company to train the Royal Thai Army instead of adding individual personnel to the Joint US Military Advisory Group, the US Military Assistance Command gained a contingency special warfare capability.

(U) ~~(C)~~ 27. The noninvolvement of US Army personnel in Thai Army counterguerrilla operations in Northeast and South (peninsular) Thailand minimizes the feedback of information on the adequacies and inadequacies of the Special Forces training programs.

Combined Operations

(U) ~~(C)~~ 28. In future combined Special Forces programs the Army should seek clear agreement beforehand with the host government on support arrangements for the combined forces.

Lack of such an agreement in Thailand posed substantial problems when the combined USASF and RTASF began to execute their mission.

(U) ~~(S)~~ 29. By mid-1967 the 46th SF Co had succeeded in achieving efficient command control of counterguerrilla training for RTA units.

Intelligence

(U) ~~(S)~~ 30. The lack of internal defense intelligence training for the RTA constitutes a weakness in the US training effort.

The problems involved here are formidable and comprise a mix of Thai government and US Mission sensitivities and Thai and US government policies. Nonetheless, the critical importance of intelligence to successful counterinsurgency operations requires that host-country ground forces possess an adequate capability to perform the internal defense intelligence mission when committed to counterguerrilla operations.

US Army Special Forces and Similar Internal Defense Advisory Operations in Mainland Southeast Asia, 1962-1967

RAC

ABBREVIATIONS

A&DSL	Administrative and Direct Support Logistics
AM	amplitude modulated
AO	area of operations
AOC	Air Operations Center
ARD	Accelerated Rural Development
ARPA	Advanced Research Projects Agency
ARVN	Army of the Republic of Vietnam
BPP	Border Patrol Police
CA/PSYOP	civic action/psychological operations
CD	Community Development
CG	commanding general
CID	Criminal Investigation Division
CIDG	Civilian Irregular Defense Groups
CINCPAC	Commander in Chief, Pacific
CISO	Counterinsurgency Support Office
CO	commanding officer
COMUSMACTHAI	Commander, US Military Assistance Command, Thailand
COMUSMACV	Commander, US Military Assistance Command, Vietnam
CONEX	container express
CONUS	continental US
CPM	Civilian-Police-Military
CRP	combat-reconnaissance platoon
CSA	Corps Senior Adviser
CSFOB	combined Special Forces operational base
CSFTB	combined Special Forces training base
CSOC	Communist Suppression Operations Command
CT	communist terrorist
CTO	Communist Terrorist Organization
CTZ	Corps Tactical Zone
CW	continuous wave
DA	Department of the Army
DC	deputy commander
DCO	deputy commanding officer
DCSA	deputy corps senior adviser
DDP	Democratic Development Program
DMZ	demilitarized zone
DRV	Democratic Republic of Vietnam
ECAD	Engineer Control and Advisory Detachment
EM	enlisted man (men)
FAC	forward air controller
5 SFGA	5th Special Forces Group, Airborne
I FFORCEV	I Field Force, Vietnam
1st SFGA	1st Special Forces Group, Airborne
FM	frequency modulated
FOB	forward operating base
FSP	forward supply point
FTX	field training exercise
FULRO	Front Unifie de Lutte des Races Opprimees [United Front for the Struggle of Oppressed Races]
FWMAF	Free World Military Assistance Forces
GVN	Government of Vietnam
HALO	High Altitude Low Opening (Course)
HHW	Hamlet Health Worker
IAC	intelligence-analysis center
IVS	International Voluntary Services, Inc.
JCS	Joint Chiefs of Staff
JGS	Joint General Staff
JSC	Joint Security Center
JUSMAG	Joint US Military Advisory Group
LC	Logistical Command
LO	liaison officer
LSC	Logistical Support Center
LST	landing ship, tank

MAAG	Military Assistance Advisory Group
MACTHAI	Military Assistance Command, Thailand
MACV	Military Assistance Command, Vietnam
MAF	Marine Amphibious Force
MAP	Military Assistance Program
MDU	Mobile Development Unit
MEDCAP	Medical Civic Action Program
MEDEVAC	medical evacuation
MGF	Mobile Guerrilla Forces
MIKE	Mobile Strike (Force)
MILPHAP	Military Public Health Assistance Program
MOD	Ministry of Defense
MOI	Ministry of the Interior
MOS	military occupational specialty
MRLA	Malay Races Liberation Army
MRP	mobile reserve platoon
MSS	mission support site
MTOE	modified table of organization and equipment
MTT	mobile training team
NCO	noncommissioned officer
NSC	National Security Command
NVA	North Vietnamese Army
OCO	Office of Civil Operations
OPCON	operational control
PACV	patrol air-cushion vehicle
PARU	Police Aerial Reinforcement Unit
PAT	Peoples Action Team
PCS	permanent change of station
PF	Popular Forces
POI	program of instruction
POL	petroleum, oils, and lubricants
POLWAR	political warfare
PP	Provincial Police
PSYOP	psychological operations
PW	prisoner of war
QRP	quick-reacting procurement.
RASD	Remote Area Security Development
RCT	regimental combat team
RD	revolutionary development
RDT	Revolutionary Development Team
RF	Regular Forces
RR	rural reconstruction
RTA	Royal Thai Army
RTAF	Royal Thai Air Force
RTASF	Royal Thai Army Special Forces
RTASFG	Royal Thai Army Special Forces Group
RTG	Royal Thai government
RTO	radio technician/operator
RTT	radio teletype
RVN	Republic of Vietnam
SAF Asia	Special Action Force, Asia
II FFORCEV	II Field Force, Vietnam
SEATO	Southeast Asia Treaty Organization
SFOB	Special Forces Operational Base
SOIC	Sector Operations Intelligence Center
SSB	single sideband
SWC	Special Warfare Center
TA	table of allowances
TAOR	tactical area of operational responsibility
TDY	temporary duty
TNPD	Thai National Police Department
TOC	Tactical Operations Center
TOE	table of organization and equipment
tt	teletypewriter
TUCR	Troop Unit Change Request
UHF	ultrahigh frequency
USAF	US Air Force
USAID	US Agency for International Development
USARPAC	US Army, Pacific
USARSUPTHAI	US Army Support Command, Thailand
USARV	US Army, Vietnam
USARYIS	US Army, Ryukyu Islands
USASF	US Army Special Forces
USASFV	US Army Special Forces, Vietnam
USMACTHAI	US Military Assistance Command, Thailand
USMACV	US Military Assistance Command, Vietnam
USIS	US Information Service
USMC	US Marine Corps
UW	unconventional warfare
VC	Viet Cong
VDC	Volunteer Defense Corps
VHF	very high frequency
VNSF	Vietnamese Special Forces
VSU	Village Security Unit
XO	executive officer

PRECEDING PAGE BLANK - NOT FILMED

Chapter 1

INTRODUCTION TO THE STUDY

PURPOSE OF THE STUDY

(U) This RAC study of US Army Special Forces (USASF) operations is the third concerning US advisory assistance to mainland Southeast Asian nations struggling with the problems of insurgency. "Case Study of US Counterinsurgency Operations in Laos, 1955–1962 (U)," RAC-T-435,[1] was published in September 1964, and "US Army Special Forces Operations under the Civilian Irregular Defense Groups Program in Vietnam, 1961–1964 (U)," RAC-T-477,[2] in April 1966.

(U) The present study is in a broad sense a continuation of the work begun several years ago and with respect to Vietnam resumes at the information cutoff date for the earlier work. The objective of this follow-on effort has been to reconstruct and analyze the recent operational experience of USASF and other similar advisory detachments assigned to train, advise, assist, and support internal defense forces in mainland Southeast Asia, in order to extract lessons applicable to planning, training, and the development of doctrine for future operations of a similar nature.

(U) One important reason for undertaking this study was that, since the late 1950's, US responses to communist aggression in mainland Southeast Asia have had the unfortunate appearance of fragmentation and imperfect coordination. At the same time, communist subversive operations in the area, although perhaps also fragmented and less than perfectly coordinated, have nonetheless appeared to be the outgrowth of a comprehensive strategy for the region as a whole. Whether this is indeed the case is not the issue. What is important is that, from the point of view of Free World resistance to indirect aggression in Southeast Asia, it is possible to ascribe a unity of identity to all the insurgent movements. This identity inheres in the fact that the insurgent movements are all communist in nature and are all supported and controlled from places external to their areas of occurrence. It is in this sense that this study considers that a regional conflict is in fact being waged in mainland Southeast Asia by communist forces.

(U) Although cast in this general frame, this study approaches the subject at a low level of security classification. The analysis is focused on the experience of US Army advisory personnel, primarily Special Forces, as implementers of US policies to counter communist subversive warfare through advice and assistance to various ground forces with assigned internal defense missions

in South Vietnam and Thailand. The study group is well aware that mainland Southeast Asia comprises more than South Vietnam and Thailand, and that, even in those countries, other than ground forces are engaged in the struggle. Nonetheless it is considered that, through a close and comparative examination of recent US Army advisory experience in Vietnam and Thailand, some guidelines to future US internal defense operations in Southeast Asia and in other developing regions of the world may be deduced.

SCOPE

(U) The study embraces US Army advisory, training, and support activities to Civilian Irregular and Regional and Popular (internal defense) Forces in Vietnam from October 1964 to mid-1967, with particular emphasis on USASF operational advisory assistance. US military assistance to the regular Vietnamese army, navy, and air force through the US Military Assistance Command, Vietnam, is not addressed. In the case of Thailand the study covers USASF advisory and training assistance in internal defense to the Royal Thai Army and the Thai National Police from 1962 to 1967. Here again the US Military Assistance Program as a whole for the Royal Thai Armed Forces is outside the scope of the study.

RESEARCH EFFORT

(U) The study progressed through the standard phases of data collection, analysis and reduction, and report writing, with some overlap in time among the three. Data collection included document search and personal interviews, and the data were acquired in continental US (CONUS) and overseas. The quarterly command reports of HQ 5th Special Forces Group (5 SFGA) in Vietnam and monthly operational summaries and after-action reports of all echelons of 5 SFGA constituted the bulk of the documents, but many memoranda, position papers, briefing papers, and letters in both draft and final form were also examined. In Vietnam, personal interviews were held with the Commander 5 SFGA and members of the group headquarters staff in Nha Trang, at the company headquarters in each of the four Corps Tactical Zones (CTZs), and with many B and A detachment personnel on site in each CTZ. The daily operations of 5 SFGA detachments were observed over the course of 7 weeks through visits to Special Forces camps from the DMZ to the lower portions of the Mekong Delta. The former commanders of 5 SFGA and a number of officers who served in it before the period of the field visit were also interviewed. In Thailand, document searches and interviews were carried out in Bangkok and at HQ 46th SF Co at Lopburi and at the three other permanent training sites where Special Forces personnel were located.

(U) The collected data were organized, collated, and analyzed in accordance with standard social science practice. Every attempt was made to isolate fact from opinion and to weigh the latter in the balance of the known facts. The analysis was also made in the light of a number of highly classified factors that, although outside the scope of the investigation, nonetheless impacted on Special Forces organization and operations in mainland Southeast Asia.

ORGANIZATION OF THE REPORT

(U) The study is divided into three parts. Part I deals with USASF advisory operations in Vietnam in the period October 1964–mid-1967. To enable this report to serve as a sequel to RAC-T-477,[2] the chapters in Pt I follow closely in title and order the chapters of the earlier document. Part II covers USASF operations in Thailand during the period 1962–1967. Part III presents an overview and assessment of the total USASF experience in mainland Southeast Asia in advisory, training, and support activities with indigenous internal defense forces. It also sets forth some implications of the recent USASF experience for Army planning, training, and doctrine for possible future US assistance to less developed countries involved in the defense of national unity against subversion and insurgency. The overview and assessment are essentially conclusory in nature, and, although the authors consider that the judgments set forth are warranted by the analyses in Pts I and II, the analyses and findings of the earlier studies were freely used in shaping the exposition.

(U) The authors hope that the format will prove convenient to all readers from the aspects of their varying degrees of interest in the whole report or particular interest in certain portions and the amount of time they wish to devote to it.

(U) Part I. Chapter 2 briefly reviews the operations of Special Forces in Vietnam before the period under study and sets forth the factual record from redesignation as 5 SFGA, on 1 October 1964, to 31 July 1967. Chapters 3 to 13 deal with separate group activities or functions. These chapters may be read selectively or in order.

(U) Part II. Chapters 15 to 19 discuss Special Forces activities in Thailand, 1962–1967, in the context of the insurgent threat and the assets and organization for counterinsurgency of the Royal Thai Government. They should be read in sequence, although persons familiar with the context need not devote much time to Chaps. 15 to 17.

(U) Part III. Chapter 20, "Overview and Outlook in Southeast Asia," offers a projection and a recapitulation of the analyses contained in Chaps. 3 to 19 that lead to the conclusions. Having read the Summary, the reader who wishes only to gain a general knowledge of the analyses supporting the conclusions should then read Chap. 20. For a general reading, however, the reader should continue with Chap. 2, then read succeeding chapters of interest and Chap. 20 in order.

PRECEDING PAGE BLANK - NOT FILMED

PART I

US Army Special Forces Operations and Activities in Vietnam, October 1964-June 1967

RAC

Chapter 2

HISTORY OF THE CIVILIAN IRREGULAR DEFENSE GROUPS PROGRAM, OCTOBER 1964-JUNE 1967

GROUP STATUS AND EXPANSION

(U) On 1 October 1964 US Army Pacific Command (USARPAC) redesignated the US Army Special Forces Vietnam (USASFV) as 5th Special Forces Group, Airborne (5 SFGA). Much more than a change of name was involved. The date marks the beginning of the transformation of Special Forces in Vietnam to group status with an authorized strength of 1297 on a permanent change of station (PCS) basis.

(U) These changes resulted from a number of decisions taken at different levels after the commanding officer USASFV had submitted a request on 1 March 1964 for additional detachments (including C detachments) that would bring USASFV to group strength. Consideration, unrelated at first to this request, had also been given to changing the system of deploying detachments to Vietnam from the 6-month temporary duty (TDY) tour to a PCS tour of 1 year. The Department of Defense resolved both questions by instructing the Commander, US Military Assistance Command, Vietnam (COMUSMACV) to request a US Special Forces group on PCS. On 6 August 1964 the Department of the Army specified the 5th Special Forces Group at Ft Bragg, N. C., for assignment to USARPAC for duty in Vietnam. The phase-in was to be completed by 1 April 1965.

(U) ~~(C)~~ On the effective date, 1 October 1964, the 5 SFGA, commanded by COL John H. Spears, consisted of 5 B and 44 A detachments. Total strength was 951 officers and men, about one-third of them on PCS. By 31 December 1964 the group was approaching TOE strength (see Fig. 1). Four C detachments had arrived; personnel numbered 1227, almost two-thirds of them on PCS. The C detachments replaced the B detachments at the four corps headquarters; this permitted the B detachments to be employed at an intermediate level of control where they could devote more attention to fewer A detachments and exercise a degree of control over Civilian Irregular Defense Groups (CIDG) operations that had not previously been possible. II Corps had been the worst example of an overextended span of control. The B detachment at Pleiku had 20 CIDG camps under its control, more by a factor of 5 than the number normally used in planning.

UNCLASSIFIED

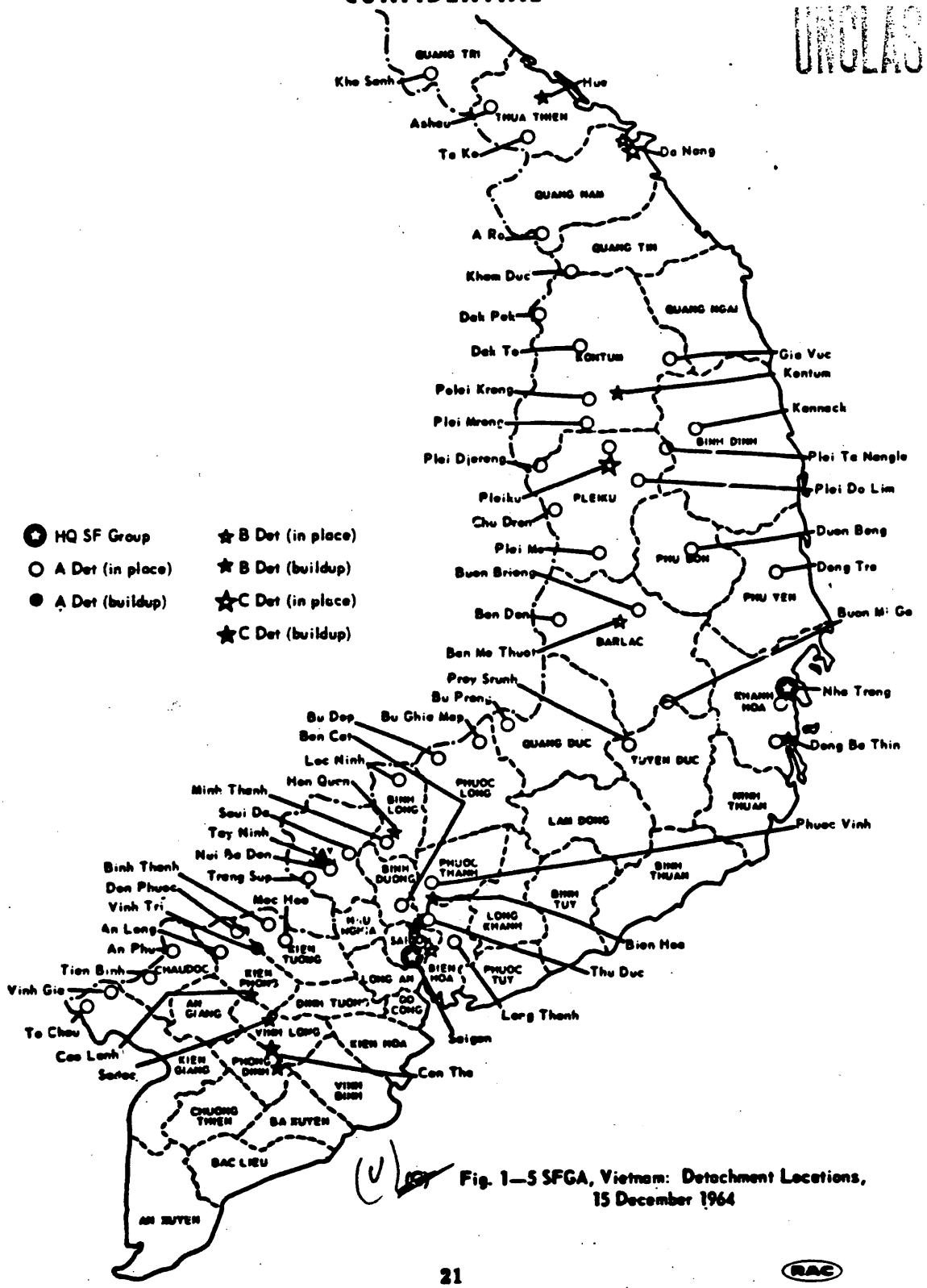

Fig. 1—5 SFGA, Vietnam: Detachment Locations, 15 December 1964

RAC

UNCLASSIFIED

Beyond TOE

(U) Early in 1965 a significant number of B and A detachments were assigned a second, coequal, advisory mission by MACV as sector and subsector advisers. The commanding officer 5 SFGA considered that detachments assigned this mission ought to have civil affairs and PSYOP augmentation and on 5 March submitted a Troop Unit Change Request (TUCR) asking, among other changes, for an increase in such specialists. This was approved, and to implement the TUCR promptly USARPAC was directed to provide 38 CA/PSYOP personnel on TDY for 90 days.

(U) ~~(C)~~ Secretary of Defense McNamara visited Vietnam in July 1965 and was sufficiently impressed with the performance of USASF detachments that he authorized an increase of 24 A detachments, if considered necessary by COMUSMACV, and further authorized that the buildup be accomplished by the interim use of detachments from the 1st Special Forces Group, Airborne (1st SFGA) on Okinawa until they could be replaced by PCS teams. Surveys made in all four Corps Tactical Zones (CTZs) to determine new CIDG camp locations established a requirement for 5 more B and 24 more A detachments. On 24 August 1965, 5 SFGA submitted a TUCR for this increase, which would raise the total of B detachments to 16 and A detachments to 72. On 31 December 1965 actual strength was at 1828, 531 more than a normal group, with 4 C, 11 B, and 62 A detachments. Although this was 5 B and 10 A detachments short of the approved TUCR increase, compared with a TOE Special Forces group it was 1 B detachment short and 14 A detachments over. The transition from TDY to PCS was almost complete. Fifty-two of the A detachments were on PCS. Only 173 officers and men were in a TDY status.

(U) With the buildup and the transition to PCS, team integrity suffered. It was no longer practicable to replace a detachment with another, carefully trained and area oriented, from Ft Bragg. During the third quarter of 1965 individual replacements began to arrive for the first PCS detachments that had deployed to Vietnam in 1964. To lessen the impact of a large turnover of key personnel within a brief period, a system of in-country rotation was adopted to provide some depth of experience in group headquarters and in most detachments.

(U) ~~(C)~~ By mid-1966, 5 SFGA's strength had risen to more than 2600. The additional detachments authorized by Secretary McNamara the previous year were all in-country. The group totaled 5 C, 16 B, and 76 A detachments. On 31 December 1966 group strength had reached 2745, with a total of 80 A detachments. Despite its continued growth the group was seriously undermanned in the spring of 1967 because it had had to form more units to carry out new missions assigned by MACV. Additional special operations, reaction force, and mobile strike units required more A detachments, whereas the operational planning and administrative and logistic support incident to special operations placed increasing demands on the staff sections. The additional detachments were created from personnel within the group. As a result most A detachments with the CIDG and border-surveillance missions were understrength.

(U) ~~(S)~~ On 11 January 1967, 5 SFGA submitted a modified table of organization and equipment (MTOE) that provided for a total strength of 3226. It called for 80 A detachments of 14 men each, 80 three-man radar teams, and another lettered company—Co E—already activated as a provisional unit under which special operations units were grouped. Headquarters and headquarters company

and the signal company were also significantly increased. This MTOE failed to receive formal approval, but MACV and the Department of the Army recognized the personnel needs of 5 SFGA in relation to the missions assigned, and authorizations were made to permit group strength to rise above 3000. Table 1 charts the growth of 5 SFGA in relation to the growth of the CIDG program.

MISSIONS

(U) ~~(C)~~ In 1967 the Vietnamese Special Forces (VNSF) command, the counterpart of 5 SFGA, consisted of the following in addition to the headquarters element:

Headquarters and service company
Special Forces group of 4 C, 12 B, and 73 A detachments
Airborne ranger battalion
Special Forces Training Center (Dong Ba Thin)
Signal company
Project Delta

With some exceptions, such as Projects Sigma and Omega, the 5 SFGA has carried out its missions as advisers to VNSF operational and control detachments, which exercise command of CIDG forces. The missions have not changed significantly since 1964, although emphasis and scope and specialization of effort in carrying them out have changed markedly.

(U) ~~(S)~~ In the autumn of 1964 5 SFGA had the following missions:

(a) To advise, assist, train, and support the VNSF in developing their capabilities in counterinsurgency and unconventional warfare.

(b) With VNSF to establish bases, as recommended by corps commanders and Senior Advisers and approved by COMUSMACV, along the western land border from which border surveillance and control operations can be conducted to block major VC infiltration routes.

(c) With VNSF to organize, train, and equip CIDG strike forces for operations against the secret war zones and major bases of the VC.

(d) With VNSF to establish bases, as recommended by corps commanders and Senior Advisers and approved by COMUSMACV, from which to disrupt VC infiltration along known VC corridors.

(e) To plan, support, and participate in special operations as directed by COMUSMACV.

(U) ~~(S)~~ A mission statement dated 5 March 1965[3] repeated these missions, with some slight alteration, as tasks under "the counterinsurgency mission" and added another:

(f) To assist the Republic of Vietnam (RVN) government (GVN) in establishing control in VC-dominated areas by enlisting the active and willing support of the people; this capability is an integral part of all the aforementioned activities.

(U) ~~(S)~~ Doctrinal guidance was developed within the group during the second quarter of 1965 and was approved by COMUSMACV after a special briefing on 20 June. It held:

CONFIDENTIAL

(U)

~~(C)~~

TABLE 1

Expansion of 5 SFGA and Span of Advisory Operations

Date (end of month)	Assigned group strength[a]	Number of detachments			Number of detachments with mission of		CIDG strength		RF and PF	Total indigenous paramilitary advised
		C	B	A	Sector	Subsector[b]	Camp strike force	Mobile strike force[c]		
Oct 64	95[illegible]	0	5	44	0	0	19,000	na[d]	0	19,000
Dec 64	1227	4	6	48	0	1	20,400	1600	600	22,600
Mar 65	1338	4	11	48	0	7	19,000	1150	4,500	24,650
Jun 65	na	4	11	54	5	31	22,000	1450	18,000	41,450
Sep 65	na	4	11	61	5	38	24,400	1900	25,000	51,300
Dec 65	1828	4	11	62	5	36	30,400	1800	28,800	61,000
Apr 66	2318	4	14	74	7	37	34,300	2100	36,000	72,400
Jul 66	2627	5	16	76	7	31	33,400	2400	34,000	69,800
Oct 66	2589	5	16	76	6	32	34,800	3200	28,000	66,900
Jan 67	2745	5	16	80	6	29	na	na	na	na
Apr 67	2726	5	16	80	5	24	32,350	5500	24,750	62,600
Jul 67	2657	5	16	80	4	23	34,350	5700	18,250	58,300

[a]Strength figures are only approximate. Official 5 SFGA reports contain numerous irreconcilable discrepancies, e.g., between the number of detachments with sector/subsector mission and total RF and PF advised for September and December 1965.

[b]Included in totals of previous column. B detachments had sector mission and A detachments had subsector, but the subsector column includes some B detachments with both sector and subsector missions.

[c]Or equivalents.

[d]Not available.

CONFIDENTIAL

UNCLASSIFIED

UNCLASSIFIED

(a) . . . that USASF resources will be employed in missions which (1) will exert constant, versatile, offensive pressure against the VC in areas where ARVN [Army, Republic of Vietnam] is not present in strength, (2) will interdict VC movement across international boundaries, (3) will, by quick response, prevent VC takeover of critical areas, and (4) will assist in extending government control; (b) that Special Forces become the "Spearhead" of rural reconstruction with efforts being made in I and II CTZ [Corps Tactical Zone] to gravitate towards district capital towns and then outward to remote areas. This in effect rejects the previous airhead concept where the land link-up too frequently failed to materialize.[3]

Implementation

(U) (S) Some of these mission statements are a little misleading with respect to the actual operations conducted in 1964 and 1965. They imply that CIDG strike forces were principally engaged in attacking VC [and later North Vietnamese Army (NVA) Main Force units in their secret bases and war zones and interdicting enemy cross-border and north-south infiltration. Actually, the Main Force secret bases and war zones were quite safe from attack until the US divisions began to arrive in 1965, although successful operations had been carried out against local VC bases and staging areas. It is difficult to believe that MACV seriously entertained the idea that CIDG strike forces, lightly armed, with no tactical organization above the company, and short on good platoon and squad leaders, could operate successfully in areas that ARVN strictly avoided. This mission was only feasible for special operations units in conjunction with strong conventional forces. After 5 SFGA had organized and trained the special operations units and US combat units had arrived, penetration of the war zones could and did begin.

(U) Few camps along the border appear to have discovered much significant enemy cross-border movement, let alone to have seriously interfered with it. The camps were too far apart, particularly along the Laotian border, to constitute more than a nuisance to the enemy, who easily moved between them. Nor was enemy movement along the interior corridors seriously disrupted by the strike forces of the camps—and for the same reason. The enemy in transit moved at night and easily avoided CIDG efforts to interdict his multiple trails.

(U) The contribution of the USASF/VNSF/CIDG toward defeating VC and NVA Main Force units lay not in attempting to engage and defeat them, but in finding them for conventional forces. The natural antagonist of CIDG strike forces—the VC they fought—were the local guerrillas in each camp's operational area. The missions as assigned in 1964 were not materially changed in 1966 and 1967, but all of them could actually be carried out, with the tempo increasing quarterly, as the special assets required were developed.

Area Development

(U) (S) During 1964–1967 the CIDG program continued to be the principal task of 5 SFGA. This embraced advising and assisting VNSF counterpart detachments to organize and train strike forces of volunteer irregulars, constructing the fortified camps from which they operated, accompanying and advising the VNSF and strike forces on counterguerrilla operations, and providing logistic and financial support for the whole program. Area development, particularly among the Montagnards, had been stressed at first, back in 1962, but early in 1963 as

MACV was taking over the program the emphasis shifted to border surveillance. Many area development sites in the interior were closed out, and new camps were constructed near the Laotian and Cambodian borders.

(U) ~~(S)~~ The term "area development" has fallen into disuse. It is synonymous with stabilization operations, or what in Vietnam is now called Revolutionary Development (RD) (and in 1965 was known as Rural Reconstruction), but on a small scale in an isolated and often sparsely populated operational area of perhaps 150 sq mi, usually in VC-controlled territory. Centered in such a Tactical Area of Operational Responsibility (TAOR) was the camp with its strike force of three or four companies under the command of the VNSF detachment commander, who was advised, assisted, and supported by a USASF A detachment. The mission was to destroy or drive out the VC and, in combination with civic action and PSYOP, to win the villagers over, thus assisting the GVN to regain control and restore the local economy. When this was accomplished, or nearly so, it was time for the A detachment to turn over the assets to local GVN authorities, to convert the strike force to RF/PF if practical, and to move on to a new site.

(U) CIDG area development activities before 5 SFGA was formed were complemental to but usually apart from GVN pacification programs, which targeted on well-populated areas. The CIDG did the same thing in the TAORs of many remote camps where there were no government programs. Early in 1965 each A detachment camp was categorized in a pacification phase (clearing, securing, development) in accordance with the Rural Reconstruction program. A detachments in areas relatively secure were augmented by a CA/PSYOP lieutenant and one NCO. This was when A detachments were being assigned the subsector mission, which thoroughly involved them with Rural Reconstruction at the district level. A few B detachments were assigned the sector advisory mission and were similarly involved at province level. Thus, as GVN pacification resources increased and programs expanded with US Agency for International Development (USAID) support and intensified into RD, the former more independent pacification activities of Special Forces merged with and were in direct support of GVN programs.

(U) In the spring of 1967 few members of the 5 SFGA had heard of the old term "area development." A striking aspect of the CIDG program since 1964, however, is the persistence of the old concept in practice. When a new camp site is opened in a VC-controlled area abandoned by the inhabitants (e.g., Bunard in III CTZ in March 1967), the inhabitants begin to return within a few days. The A detachment and its VNSF counterparts are faced with a refugee problem—people who have come to the new camp to escape VC control. They are in need of food, clothing, shelter, medical care, and means to earn a livelihood. The area development cycle has begun—to end, it is hoped, with the reestablishment of a viable community controlled by and loyal to the GVN.

(U) ~~(S)~~ The debriefing report, dated 31 May 1967,[4] made by the CO 5 SFGA on relinquishing command, summarized the major missions assigned to the group by MACV as follows:

a. Advise and assist VNSF [in the CIDG Program].
b. Execute the duties of sector and subsector advisers in those provinces designated by COMUSMACV.

c. Conduct special operations as directed.
d. Collect, process and disseminate intelligence.
e. Conduct MACV Recondo School for the training of FWMAF [Free World Military Assistance Forces] personnel in long range reconnaissance techniques.

(U) ~~(S)~~ Even in summary form these statements reflect the emphasis on intelligence and special operations that became a characteristic of the CIDG program beginning with the US combat force buildup in 1965. Yet, at the beginning of the third quarter of 1967, 64 of 79 A detachments in 5 SFGA were located in CIDG camps (see Fig. 2). Of these, 36 had the single CIDG (the old area development) mission without border surveillance. In the quarterly report all 28 camps with the border mission were also shown as having the CIDG mission. (U) ~~(C)~~ Actually there were a few camps (e.g., Kham Duc) in virtually unpopulated border areas, but most of the border-surveillance camps were concerned with area development and some in the Delta with the subsector mission, intensively. Despite the growing emphasis on special operations and the production of combat intelligence after mid-1965, area development (no matter by what name it is called) within an initially hostile environment, but apart from the central purely military struggle between US and other FWMAF forces and Main Force VC/NVA units, continued to be the basic role of Special Forces in Vietnam. Other missions and the development of special assets to perform them have been an outgrowth of area development (CIDG) operations.

Impact of the US Combat Presence

(U) The growth of 5 SFGA was stimulated and the priorities of missions were shifted by the changing character of the war in I, II, and III CTZs, where the increasing US troop presence began to impact on the CIDG program in the third quarter of 1965. Arriving US ground-combat units were severely handicapped in their conduct of operations. The language obstacle and the "round-eye" problem made ground reconnaissance and the collection of intelligence difficult for units suddenly thrust into an unfamiliar combat environment. US unit commanders soon realized that a CIDG camp was a primary source of local information. They soon learned that guides, interpreters, scouts/trackers, and captive interrogators could be found in CIDG camps and that the strike force companies—provided that their special aptitudes were exploited and they were not expected to perform in all respects like a US infantry company—could be useful adjuncts to US search-and-destroy operations.

(U) A New Role. Recognition of the capability, actual and potential, of the CIDG program to meet the increasing intelligence needs of MACV and the field forces led to the professionalization of the 5 SFGA intelligence effort in 1967 by a large augmentation of Intelligence Corps specialists. It also lent impetus to increased use of special operations units to perform long-range reconnaissance patrols in support of FWMAF operations. The first such unit, Project Delta, had become operational toward the end of 1964; Omega and Sigma were organized in CY66.

(U) The recognition of CIDG capabilities coupled with the growing need of US combat forces for combat intelligence also led to the formation of additional Mobile Strike (MIKE) Force companies and combat-reconnaissance platoons (CRPs) and to improved procedures for the whole intelligence cycle. US

UNCLASSIFIED

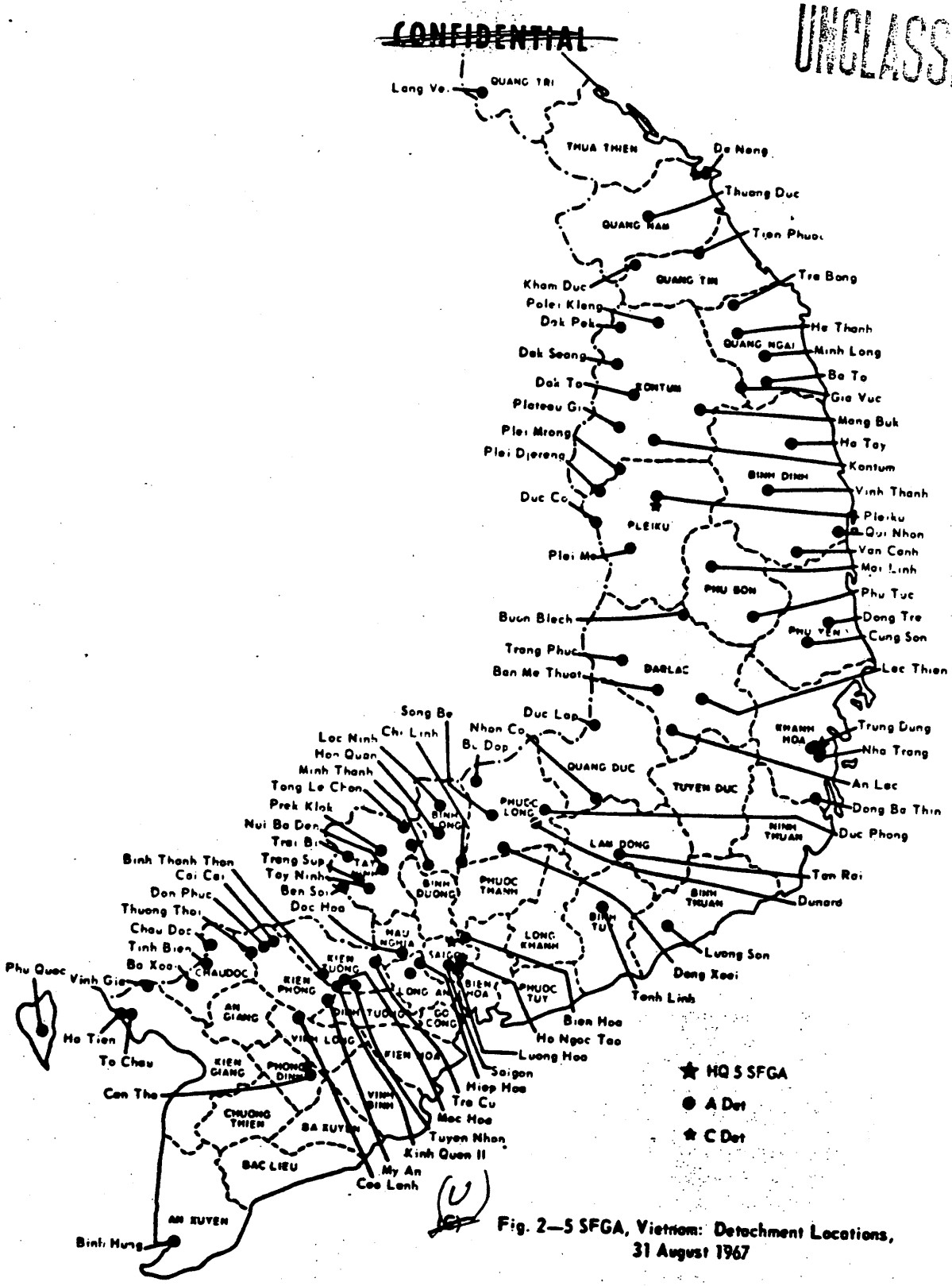

Fig. 2—5 SFGA, Vietnam: Detachment Locations, 31 August 1967

UNCLASSIFIED

forces with their traditional reliance on overwhelming firepower became the chief consumers of 5 SFGA intelligence collection. Committed to operations against an elusive enemy difficult to find and fix, their intelligence requirements created an auxiliary role for the 5 SFGA: to provide intelligence on the shifting locations of the enemy and to develop contact in joint operations so that the decisive firepower of US ground and air forces could be brought to bear. In II and III CTZs the camp strike forces came more and more under indirect US operational control.

(U) Other Benefits. The buildup of US forces helped the CIDG program in several ways. The Quarterly Command Report of 5 SFGA for the period ending 30 September 1965[5] lists the following:

(a) US Army engineer support to assist in the construction of CIDG camps;
(b) US combat forces for employment as security elements during the conduct of area assessments to select new CIDG sites;
(c) Combined US combat force/CIDG clear and hold operations that will allow the establishment of CIDG camps in previously denied areas;
(d) Increased helicopter support for CIDG airmobile operations;
(e) US combat forces for employment as reaction forces to exploit opportunities developed by CIDG operations and to relieve CIDG troops or camps under attack.

(U) Problems. Difficulties also arose. They stemmed invariably from an initial lack of understanding on the part of US commanders at all levels of the nature of the CIDG program, its command structure and the role of USASF operational detachments, and the capabilities and limitations of irregulars. The most common mistakes of US commanders and staff officers were to equate a strike force company with a regular infantry company and to assume that CIDG camps located in a US unit's assigned operational area automatically came under its operational command.

Sector and Subsector Advisory Mission

(U) A unique coequal mission assignment to certain A and B detachments in 1965 demonstrated their versatility. In the autumn of 1964 MACV and 5 SFGA studied the practicality of assigning the subsector advisory mission on a coequal basis to A detachments in CIDG camps. The MACV subsector advisory program was at that time a relatively recent development. The 103 MACV teams in place by the end of 1964 had proved their worth, and MACV wished to broaden the coverage as rapidly as practicable. Because of their self-defense capability (lacking in the small MACV teams) Special Forces detachments were thought to be better equipped for the task in insecure districts largely controlled by the VC.

(U) After a successful test period of an A detachment in the dual role, MACV assigned the subsector mission to appropriately situated A detachments in all four CTZs. Some detachments were even assigned to subsectors without a coequal CIDG mission. In certain provinces in III and IV CTZs, where most of the subsector commanders were advised by A detachment commanders, the control B detachments were assigned the sector advisory mission. The mission of an A detachment commander in this assignment was to advise and assist the subsector commander (district chief) in the training and employment of his regional and popular forces. As a sector adviser a B detachment commander had a similar mission in relation to the sector commander (province chief).

RAC

(U) ~~(C)~~ By October 1965 5 B detachments had coequal missions and 38 A detachments were assigned the subsector mission. The number of detachments assigned these missions peaked in the first quarter of 1966 (7 B and 41 A detachments) and thereafter declined. At the end of June 1967 there were 4 B and 23 A detachments so assigned. HQ 5 SFGA and the companies (C detachments) in the four CTZs had no responsibility with respect to these missions or for the performance of their A and B detachments in carrying them out On the whole the performance was very good, but A detachments were clearly better motivated and more effective in carrying out the subsector mission when controlled by a B detachment charged with the sector advisory mission.

(U) The combination of the coequal control/sector missions of B detachments and coequal CIDG/subsector missions of A detachments under them was most productive in the Delta where the US troop presence did not impact and the contest, despite the ARVN presence, was for the most part between GVN paramilitary forces and local VC units. In these circumstances the B detachment commanders were in a position to plan and coordinate the operations of all CIDG and RF PF units in a province, based on an integrated intelligence system. Detachments B-41 at Moc Hoa in Kien Tuong Province, B-42 at Chau Doc in the province of the same name, and B-43 at Cao Lanh in Kien Phong Province—all in IV CTZ—were able to operate most effectively in this way.

NEW AND IMPROVED CAPABILITIES

Combat-Reconnaissance Platoons

(U) ~~(C)~~ The formation of CRP units of 34 men began during the first quarter of 1965, one to each camp. It took some time to send so many platoons to Dong Ba Thin to receive special training at the VNSF training center under Project Delta instructors, but they became the elite unit of each camp and measurably increased the effectiveness of strike force operations. In most camps a CRP squad was attached to a regular strike force patrol, usually of company strength. The CRP was infrequently employed as a unit, but elements were often assigned target acquisition missions or used for PSYOP and small raids or to adjust artillery fire and air strikes. In July 1966 the decision was taken to expand CRP strength to two per CIDG camp.

Mobile Strike Forces

(U) ~~(C)~~ A grave weakness in the CIDG program during the 1961–1964 period had been the lack of an inherent capability to reinforce the garrison of a camp under attack or to commit additional forces to exploit a successful patrol contact. In June 1965 COMUSMACV approved the creation of a small reserve force for each C detachment for use in long-range patrolling, reinforcement, and reaction. These multipurpose reaction forces, called "MIKE Forces," were formed during the fourth quarter of CY65. A MIKE Force was also organized at Nha Trang under the operational control of the commander, 5 SFGA. They consisted of a headquarters and three companies with a total strength of 594. Each company was composed of three infantry platoons, a weapons platoon, and a reconnaissance platoon and had a total strength of 198. They were trained to

a tactical competence beyond that of a CIDG strike force company. An A detachment, initially without VNSF counterparts, was assigned to each MIKE Force. (U) ~~(C)~~ All personnel were eventually airborne-qualified for prestige and pay purposes rather than for fulfillment of a real tactical requirement, although three parachute operations were carried out during the first half of 1967. The addition of these reaction forces increased the operational potential of all A detachment camps, since the MIKE Force could be committed whenever a CIDG strike force developed a contact worth exploiting. It also created combat situations, formerly rare, where the B detachment commander and sometimes the Special Forces company commander appropriately assumed operational command. The MIKE Forces were found so useful that more companies were created. By 1967 a total of 19 were authorized.

Mobile Guerrilla Forces

(U) ~~(C)~~ During the last quarter of 1966 a Mobile Guerrilla Force (MGF) was formed under the lettered company in each CTZ. An MGF consisted of an A detachment, a mobile guerrilla company of 150, and a CRP—a total of 196. They were to operate in enemy-controlled territory for periods in excess of 30 days, establishing their own secret patrol bases from which to conduct reconnaissance and combat operations against VC/NVA forces. Four more MGFs were formed during the first months of 1967, but in the early summer of that year the distinction between a MIKE Force company and an MGF began to disappear. Their organizational structure and capabilities were much the same. Company commanders began to use either one for reaction force and mobile guerrilla missions, and later in the year 5 SFGA adopted the practice of referring to both MIKE Force and MGF operations as MIKE Force operations.

Special Operations

(U) The need for specially organized and trained units to perform intelligence-gathering missions in enemy-controlled areas increased with the buildup of US combat forces that began in the spring of 1965. As the capacity of US forces to launch more and larger operations grew, the requirements for intelligence on which to base them and for the recovery of prisoners of war increased. As the enemy responded with his own buildup, the desirability of harassing and interdicting his bases and war zones increased.

(U) ~~(C)~~ The first unit specifically trained to perform special operations, however, was Project Delta, organized in 1964. When it became operational in December after a long period of training it consisted of six reconnaissance/hunter-killer teams of eight VNSF and two USASF and a reaction force of the 91st Abn Ranger Bn of three companies. By 1967 Project Delta had expanded to 16 reconnaissance teams composed of four VNSF and two USASF, eight roadrunner teams, and a reaction force of six companies. The pattern of operations consisted of infiltrating teams by helicopter at dusk or after dark into a VC-controlled area, without benefit of lights or ground reception party. At first the teams were limited to reconnaissance and were withdrawn if discovered. They evolved into hunter-killer teams after a decision to allow them to continue operations provided that contact had been safely broken and to attack small targets that they could handle without help. Missions were assigned by MACV/Joint General Staff (JGS) based on recommendations from the commanding general (CG) VNSF and CO 5 SFGA.

(U) ~~(S)~~ In October 1966 the previously formed special operations units Sigma and Omega were committed to this concept. They operated under the operational control of I and II Field Forces, Vietnam. USASF personnel commanded these assets without VNSF participation or the use of ARVN reaction assets. Each project consisted of eight roadrunner teams of four indigenous personnel and eight reconnaissance teams of two USASF and four natives. Reaction forces consisted of three MIKE Force companies.

Intelligence

(U) ~~(C)~~ During CY67 the intelligence staff sections at group and company levels underwent a metamorphosis involving the addition of personnel and a reorganization of effort. Because of the enlarging scope of the intelligence function, three new subsections were created in the group S2 section. A Counterintelligence Branch, Collection Branch, and a Source Control Office were added to the Order of Battle and Administrative Branches. During April and May 1967 a military intelligence detachment of 110 specialists arrived to give enormous impetus to the scope and sophistication of the group's intelligence capability. Augmentation personnel were integrated with Special Forces personnel to staff the Intelligence Analysis Center (IAC) at group and each company headquarters. Collection and counterintelligence specialists were used to upgrade those activities at A and B detachments.

COMMAND AND CONTROL

(U) ~~(C)~~ The command relations of 5 SFGA within MACV and in relation to the ARVN command structure continued after 1 October 1964 as before until the US buildup demanded a change. Operational control of USASF detachments in each CTZ was vested in the Corps Senior Adviser, who was collocated with his counterpart, the ARVN corps commander. The 5 SFGA came under the command of US Army Support Command, Vietnam [later redesignated US Army, Vietnam (USARV)], but COMUSMACV retained operational control.

(U) In May 1965 HQ III Marine Amphibious Force (III MAF) was activated in I CTZ. In August HQ Task Force Alpha, soon redesignated I Field Force, Vietnam (I FFORCEV), was activated in II CTZ, and in March 1966 II FFORCEV was formed in III CTZ. To the commanding generals of these forces COMUSMACV assigned the additional duty of senior adviser to the ARVN corps commander. The former Corps Senior Advisers remained as deputies except in IV CTZ, where these changes did not occur because no US field force was deployed.

(U) Confusion arose when US field forces assigned operational areas that included CIDG camps to subordinate units. US commanders and their staffs did not understand that USASF detachments were in a supporting and advisory role to CIDG forces and attempted to issue orders through them to the ARVN camp commanders without prior arrangement with the corps commanders. This was the cause of some troublesome incidents until the Corps Senior Advisers published detailed instructions.

Changes within the Group

(U) In the third quarter of 1966 the commander of 5 SFGA restructured the command section. The post of group executive officer was eliminated and the command was reorganized under three deputy commanding officers (DCOs): one for Counterinsurgency, one for Administration and Logistics, and one for Special Operations. At about this time a Comptroller Section, incorporating the CIDG Finance Office, a Judge Advocate General Section, and a Staff Engineer Section, were also created. In December 1966 the S5 section was redesignated the Revolutionary Development Support Activity (RDSA) to emphasize USASF support of the GVN pacification program. In mid-1967 the system of organization of the command section under three DCOs was abandoned by the new commanding officer, COL J. F. Ladd, who preferred the system of one DCO and a group executive officer.

TECHNIQUES AND DEVELOPMENTS

Logistics

(U) ~~(C)~~ The unique Parasol Switchback logistics system centered in the Counterinsurgency Support Office (CISO) in Okinawa continued to operate, but as US Army logistic support facilities in Vietnam increased with the buildup of US forces it became more and more practicable for 5 SFGA to obtain common-user items of all classes of supplies from in-country sources through arrangements with USARV. Eventually shipments from out of country will probably be limited to items peculiar to the CIDG program.

(U) Logistic support within the group was partly decentralized and rendered more flexible by establishing Forward Supply Points (FSPs) in all four CTZs. Fifteen-day stockage levels of fast-moving items were maintained at these FSPs by direct land, sea, and air shipments.

(U) Camp Construction. Two new designs for constructing camps were developed: the fighting camp and the floating camp, the latter to be used in the Mekong Delta to counter the deteriorating effects of inundation each rainy season. Early in 1967 the design for all future CIDG camps was standardized by specifying the facilities authorized for new camps and firming specifications for each structure.

Revolutionary Development Support

(U) In the summer of 1966 a staff study to determine the effectiveness of USASF/VNSF civic action and troop-motivation indoctrination training revealed serious weaknesses. CIDG camps lacked an adequate resource for adviser/counterpart development of local CA/PSYOP programs. To overcome this deficiency CA/PSYOP teams of 12 Vietnamese CIDG personnel were organized in each camp. As mentioned previously, to emphasize 5 SFGA support of Revolutionary Development, the current name of the GVN's pacification program, the S5 section of the staff was renamed the Revolutionary Development Support Activities Section. PSYOP, however, was transferred from this section to the S3 section on the reasoning that an activity affecting all operations should be

part of the operations section. The result was a reduction in scope of RD section activities, despite the new appellation, to those of a civic action section. Much RD activity in the CIDG program, owing to the nature of the personnel, is in-house. These hired volunteers and their dependents, especially the Montagnards, are themselves the target of RD for the purpose of inculcating loyalty to the GVN. For example, consideration was being given in mid-1967 to the practicability of establishing commissaries and post exchanges in the camps for CIDG personnel and their dependents.

Air Support

(U) ~~(C)~~ All five categories of aviation support were required: command and control, fire support, cargo and troop movement, reconnaissance, and evacuation. The US buildup made it possible for 5 SFGA to obtain improved air support. The following aircraft were under group control in 1967:

4 U-1A Otters
7 C-7A Caribous
23 UH-1D troop-carrier helicopters
8 UH-1C armed helicopters

(U) These assets met the requirements of group HQs command and control, RECONDO School, and Project Delta support. Air support for subordinate units was provided from direct-support assets in the CTZ. It was the availability of helicopters incidental to the US buildup that made the expansion of the MIKE Forces (and Mobile Guerrilla Forces) and their tactical role possible. Air Force tactical air support was always on call and responsive, and Air Force C-123's and C-130's regularly carried most of the tonnage from the 5 SFGA Logistical Support Center (LSC) at Nha Trang to the camps.

Training

(U) RECONDO School. This school was opened at Nha Trang in September 1966 to train personnel from all FWMAF in long-range reconnaissance techniques developed by Project Delta. The course covered 3 weeks, and a new class began every fortnight. Training included an advanced course for personnel being assigned to Projects Delta, Sigma, and Omega.

(U) VNSF Training Center. During the period of this study the VNSF Training Center at Dong Ba Thin was developed into a productive training facility through efforts to upgrade the content and the quality of the instruction. Leadership and specialist courses for VNSF and CIDG personnel improved the effectiveness of the whole CIDG program by increasing the general level of individual competence.

(U) Camp Strike Forces. During April and May 1967 there was little evidence of refresher training or unit training in most CIDG camps even though group HQs required the A detachments to submit training programs in February. Since there was no pause in operations there was little opportunity for such training. This appeared to be the one training weakness in contrast to the thoroughly organized formal training.

Planning

(U) Operational. A significant improvement in the Special Forces effort occurred in 1966 when a structured Concept of Operations for CY67 (enclosure to Ref 4) was developed by 5 SFGA and approved by COMUSMACV. The concept, commonly referred to as the National Campaign Plan, projected operational planning far enough in advance to allow adequate lead time to prepare for its phased execution. A follow-on 1968 concept had been drafted and was being staffed in July 1967 for presentation in August. The impact of the National Campaign Plan on 5 SFGA operations is discussed in Chap. 7.

(U) ~~(S)~~ Contingency. The role of the CIDG in the posthostilities period was also under consideration. One possibility was to convert the CIDG with VNSF and the ranger battalions into a border constabulary. An obvious corollary was vocational training to facilitate assimilation of the irregulars into Vietnamese society.

Electronic Surveillance

(U) ~~(S)~~ During the second quarter of 1966 a few AN/PPS-5 radar sets with operators were deployed to three border-surveillance camps in I and IV CTZs. Results were encouraging, especially at Cai Cai in the Delta, where relatively large troop movements across the border in Cambodia were monitored and a number of local squad-sized probes around the camp perimeter were detected. When MACV directed that 80 of these sets be issued to 5 SFGA, 80 three-man radar teams were included in the MTOE recommended in January 1967.

Counterpart Relations

(U) ~~(C)~~ During the years of the Diem regime an understandable but wrong and self-defeating attitude toward the VNSF had persisted among many USASF personnel, especially in the A detachments. Frustrated by incompetent camp commanders and VNSF detachments that could not measure up to US standards, the A detachment commanders tended to assume an authority that was not properly theirs by exercising command in all but name. This brought better short-term results in operational effectiveness, but it was counterproductive in preparing the VNSF to achieve an adequate independent capability.

(U) ~~(C)~~ This frame of mind was strongest among detachments in the Montagnard camps of II CTZ. There it was compounded by a natural rapport between the Green Beret and members of the Rhade and Jarai tribes that encouraged a de facto direct relation, bypassing the VNSF detachment. This equivocal situation of their own making could place in jeopardy the USASF advisory effort in all the Montagnard camps, as was clearly demonstrated during the brief revolt in several camps in 1964 and the subsequent flare-up in 1965. The Front Unifié de Lutte des Races Opprimées (United Front for the Struggle of Oppressed Races, commonly known by the acronym FULRO) has resorted to rebellious behavior on several occasions to stimulate GVN promises to meet their demands. US Special Forces personnel were required to preserve a strict aloofness toward this conflict. In April 1966 COL William A. McKean, CO 5 SFGA, published a forthright letter of guidance to all 5 SFGA personnel concerning FULRO, but such partly emotional attitudes are persistent.

(U) ~~(C)~~ COL Francis J. Kelly, who assumed command of 5 SFGA on 5 June 1966, believed the time opportune for strong command emphasis on the counterpart relation. In his view the leadership and staff procedures of the VNSF had gradually improved through formal training to a point of adequacy that made myths of certain firmly held beliefs on the part of many USASF personnel, viz, that VNSF personnel were incompetent and something less than eager to take the field, and hence the USASF should shoulder them aside and run the camps and conduct operations themselves, and that the Vietnamese were cruel and arrogant in their behavior toward the Montagnards, who deserved American sympathy. The commander categorically reminded all personnel that they were advisers and that, although they were expected to display the utmost initiative, they must do so within the limits proper to the advisory role.

(U) ~~(C)~~ In the spring of 1967 the relative degree of collocation of advisers and counterparts at the C detachment level had an inexplicable trend from north to south. Separation of living quarters in I CTZ rose through II and III CTZs to collocation and virtual integration in IV CTZ. This was deceptive in that the Tactical Operations Center (TOC) at Danang was fully integrated with working spaces for counterparts. At Nha Trang the group headquarters pattern was similar to that of C Company at Danang in having separation of facilities but unlike C Company in that there was no collocation of office space. Except at Can Tho in IV CTZ, there appeared to be little informal social intercourse between advisers and advised. The outward manifestations of rapport were more noticeable at B detachments and less so at many A detachment camps.

Conversion

(U) As long ago as 1962 Special Forces were trying to develop a workable formula for turning over a camp and its CIDG assets to the GVN when stabilization had reached a stage where the A detachment and the VNSF counterparts should be withdrawn. Progress was made during 1966-1967 in converting CIDG to RF/PF and also, as at Plei Mrong in III CTZ, in withdrawing the US A detachment and leaving the VNSF A detachment solely responsible.

Operations

(U) During the 1964-1967 period, camp strike force operations became bolder and more numerous as the chances that a camp would be overrun or a patrol overwhelmed decreased with the growth of the MIKE Forces and the presence of FWMAF units that could react quickly. The rapid development of special operations capability coincided with this period. It was the increasing availability of helicopters that made these developments possible.

(U) ~~(C)~~ Wherever US Army operational areas included or overlapped the TAORs of the camps, the strike forces came under indirect US operational control. They were then often involved, although in an auxiliary role, with the larger conflict against VC/NVA Main Force units. Detachments in the sector and subsector roles were in a position to coordinate the efforts of all paramilitary forces in the province and district.

SUMMARY COMMENT

(U) The period 1964-1967 was one of growth for the 5 SFGA to a strength more than twice that of a TOE group, with wider activity and refinement of capability made possible by the US buildup. The 5 SFGA successfully continued to carry on the basic CIDG program, to respond well to the sector/subsector mission when assigned, and to adjust to the intelligence and joint operations requirements of US forces in the field.

Chapter 3

PREMISSION TRAINING

(U) This chapter considers the premission training of USASF replacement personnel assigned to 5 SFGA and the 46th SF Co. Changes in the training program are examined in the light of field experience in Thailand and the Republic of Vietnam (RVN), and problems are identified.

THE PROGRAM: AN OVERVIEW

(U) A fundamental purpose of Special Forces premission training programs has been to provide officers and men with detailed special information on the areas of detachment assignments. The traditional program is of 12 weeks' duration, and until 1965 all detachments assigned to Vietnam from either Okinawa or Ft Bragg were cycled through it. Under the traditional program, personnel were organized into detachments and trained as a team and on completion of the training were deployed as replacement detachments. Throughout each program cycle, the skills of each individual detachment member were refined from the aspect of prevailing conditions in-country, and all personnel were cross-trained in one or more team specialties. Language training, instruction in CA/PSYOP, intelligence, and area studies were emphasized for the team as a whole. Extensive field training exercises afforded detachments opportunity to apply their combined skills under simulated active-service conditions. Another significant aspect of the program was that individuals were freely transferred from one detachment to another in the interest of achieving balanced capabilities and harmonious working relations among team members.

Major Alterations

(U) After October 1964 the premission training program for USASF deployed to South Vietnam from Ft Bragg underwent three alterations.

(U) Reduction. The training cycle was reduced from 12 to 6 weeks. This reduction was not applied to replacements for the 46th SF Co in Thailand. The 46th SF Co did not arrive in Thailand until the autumn of 1966, and replacements were not required until a year later. At the end of the period of this study (July 1967) a plan had been worked out to replace personnel within the 46th SF Co by detachments, staggering the process to avoid too great a loss

of experience. Replacement detachments were scheduled to receive the standard 12 weeks of instruction.

(U) Individual Training. Another change in premission training for Vietnam was the abandonment of training individuals as members of prestructured detachments. When the policy of individual replacement for 5 SFGA was adopted there remained neither a requirement for nor a possibility of training replacement personnel in preformed detachments. The new replacement system resulted in some loss of team integrity in Vietnam. Under the individual replacement system, team members finish their tours and are replaced on the average of once a month. In-country transfers increase the turnover rate.

(U) The individual replacement system has, however, overcome one weakness of the earlier period—the sharp drop in team experience and the temporary but complete loss of rapport with counterparts that resulted when a detachment that had completed its tour was relieved by a detachment from Ft Bragg or Okinawa. Nevertheless the shift to individual replacement, although a necessary concomitant of the change from 6-month TDY to 12-month PCS, fundamentally altered the old and esteemed pattern whereby teams that had trained together remained together during their stay in-country and returned to Okinawa or Ft Bragg together.

(U) Quality of Personnel. The third alteration in premission training relates to the experience and background of the personnel input, an inevitable consequence of the rapid expansion of the US effort in Vietnam. Formerly officers and enlisted men accepted by Special Forces were older individuals who brought considerable prior training and experience and a strong motivation toward Special Forces work. Since 1965, however, the overall needs of the US Army have caused Special Forces to accept younger officers and men at the A detachment level, many of them with little experience and a lack of strong motivation. The concern of 5 SFGA with respect to replacements received, however, was less with their quality than with the extent of their experience and the thoroughness of their training.

THE CONSEQUENCES

Difficulties in Evaluation

(U) Any attempt to evaluate the consequences of these alterations in relation to detachment performance in the field encounters certain basic problems. It is difficult to separate shortcomings in the training program from the limitations of the personnel trained. Whether, for example, the failure of some officers and men involved in the CA/PSYOP effort to recognize the importance of civic action is a function of their own personal attitudes or reflects a training failure cannot be assessed without benefit of controlled research procedures. Similarly the degrees to which emphasis on combat intelligence to the detriment of the internal defense intelligence effort may have resulted from improper training and from the constraints imposed by the commitment of US combat forces to an insurgency environment would also have to be examined in greater detail.

(U) The second difficulty, no less formidable, is in distinguishing the impact of a particular change from the cumulative impact of all three. Of itself

the reduced training cycle need not have a lowering effect on performance of personnel assigned to the RVN, but some offset is required such as upgrading personnel-procurement standards and intensifying the instruction provided to accomplish as much in 6 as in 12 weeks. But when the personnel accepted are younger and have less Army experience than formerly, the consequences of a reduced training cycle are likely to be serious. The same holds true with respect to the abandonment of team training. When replacements sent to 5 SFGA were men with considerable service, most with many years of experience in Special Forces, the elimination of detachment training, although undesirable, had less potential for creating problems. Given the trend toward younger and less experienced officers, however, the elimination of premission training of detachment teams may account for some problems that have arisen.

(U) Finally, there is the question of the extent to which the reduction of the training cycle was simply incidental to the abandonment of the context in which it formerly occurred—the formed detachment earmarked for Vietnam. The Special Warfare Center (SWC) was forced, by the change from 6-month TDY to 12-month PCS, to revert to the standard Army replacement system. Six weeks of training of the individual replacement in his military occupational specialty (MOS), together with general area orientation, was considered to approximate the amount of time devoted to such training in the team context. In earlier days, although inevitably some detachments were diverted to sites other than those for which they had prepared, most spent their time in area assessment and familiarization with specific sites. Specialized site study of course cannot be given to the individual replacement. Altogether the reduction of the training cycle, the abandonment of team training, and the acceptance of personnel with less experience have undoubtedly affected performance in the field. Whether the impact has been significant, and to what extent, are questions that can be answered only in the most qualified terms.

Areas of Impact

(U) In the light of field experience it appears that the impact of these changes has been most pronounced in areas of activity that do not conform to the more traditional military functions. In civic action and PSYOP, for example, and in the internal defense intelligence effort the effect appears greatest. Denied sufficient language training and grounding in the social, political, and cultural conditions in specific areas of deployment, USASF personnel appear to have found it more difficult to carry out these missions since the third quarter of CY65. Although it can be argued that even a full 12-week program is insufficient to provide adequate training in such skills, it is reasonable to conclude that the consequences of a reduced training effort would be reflected most clearly in activities requiring skills beyond the usual scope of regular military training.

(U) ~~(C)~~ Alterations in the premission training also appear to have had an adverse impact on the performance of individual detachments in Vietnam. The shift to individual replacement has led to a situation in some camps where senior NCOs with many years of experience are easily able to circumvent the authority of young A detachment commanders. This appears where the officers involved are inexperienced in the intricacies of command and where the senior NCOs are in a position to avail themselves of contacts at higher echelons. Under the present replacement system a young captain arriving to take over

command of a detachment in a CIDG camp has usually never before seen any of the members of the detachment. If he wishes to introduce changes against the wishes of the team sergeant, he must proceed with care.

SUMMARY COMMENT

(U) The lowering of personnel-procurement standards and the changes in premission training coincided with a reorientation of the Special Forces role in Vietnam. The arrival of the first individual replacements in Vietnam occurred in the fall of 1965 when the US combat presence was gradually bending the 5 SFGA counterinsurgency effort to support the requirements of conventional operations. This was especially evident with respect to the CA/PSYOP and intelligence missions, each of which gradually came to assume the character of an adjunct to the conventional US military effort. On the other hand the changes in premission training do not appear to have significantly lowered the ability of detachments to perform the more standard military functions, except possibly administration.

(U) Although it is difficult to assess the overall impact of the changes, among the indications are a growing tendency to shift the administrative burden from the A to the B detachment level, the careful screening of arriving replacements for MOS proficiency, the establishment of in-country "refresher" courses for those whose skills are found inadequate, and a gradual reorientation of the CA/PSYOP effort away from nation building and toward military civic action.

(U) In a general sense, alterations in the premission training program have not unduly hindered the adaptation of USASF personnel to the constraints of an insurgency environment characterized by the presence of large conventional US units. It would be a mistake to conclude, however, that such changes would be compatible with the unconventional warfare mission. Here the team concept seems to be prerequisite for effective performance. Similarly the reduced training cycle, involving as it does minimal instruction in language and local conditions, appears inconsistent with the need for personnel capable of sustained operations behind enemy lines. Although the use of officers and enlisted men with little background and experience in USASF is feasible in the context of the present emergency in Vietnam, to expect that such individuals would effectively perform an unconventional warfare mission would be overly optimistic.

Chapter 4

COMMAND, CONTROL, AND COORDINATION

(U) Until 1 May 1964 the commander, US Army Special Forces Vietnam (USASFV), whose headquarters was at Nha Trang, exercised full command including operational control. On that date the latter was transferred to the senior US advisers at the four Army of the Republic of Vietnam (ARVN) corps headquarters. The prospect of Nha Trang's losing operational control (the essence of tactical command) had been viewed with concern by most USASF officers, largely because the operational detachments would be controlled by infantry colonels having little knowledge of Special Forces or the Civilian Irregular Defense Group (CIDG) program.

UNDER THE OPERATIONAL CONTROL OF THE CORPS SENIOR ADVISERS

(U) Actually the transfer had little impact. It was soon apparent that the commander, USASFV, had not been deprived of much. The concept of operational control is illusory when applied to a headquarters supposedly exercising control over subordinate advisory detachments in camps sited throughout Vietnam. With operational control vested in the Corps Senior Advisers, a logical pattern of control at all levels of the US advisory effort emerged to parallel the ARVN operational control of all assets. The Corps Senior Adviser had a basis for providing the corps commanders with advice on coordinating CIDG and ARVN operational planning and the conduct, when appropriate, of joint operations. Heretofore the CIDG camps in their Corps Tactical Zones (CTZs) had been more of an irritant than an asset to the Corps Senior Adviser. Difficulties and misunderstandings with respect to the role and the capabilities of camp strike forces now disappeared, and the commander, USASF found that he had virtually the same control over his detachments and the CIDG program as before.

Takeover by US Field Commanders

(U) This was the command system on 1 October 1964 when USASFV was redesignated the 5th Special Forces Group, Airborne (5 SFGA). It continued thus until the US buildup demanded a change in I, II, and III CTZs. With the deployment of a Marine Amphibious Force (MAF) in I CTZ in the spring of 1965, it was desirable for the US commander to be in a position to coordinate

the planning and conduct of US and ARVN operations. When HQ III MAF was activated at Danang in May 1965, the commanding general was assigned additional duty as CSA. The officer whom he superseded remained as Deputy Corps Senior Adviser.

(U) As the buildup progressed, HQ I Field Force Vietnam (I FFORCEV) was established at Nha Trang in August 1965, and its commander became the CSA in II CTZ. The same occurred when II Field Force Vietnam (II FFORCEV) was established in March 1966 in III CTZ. Since the US deployment virtually excluded the Delta, there was no change in IV CTZ.

Deputy Corps Senior Adviser

(U) It was a unique experience for a US officer serving as a Corps Senior Adviser before the US buildup to realize one day that although he was sitting at the same desk, he was now deputy to the field force commander in the latter's capacity as Corps Senior Adviser. His authority as Deputy Corps Senior Adviser was outwardly much the same because the CSA delegated many functions to him and acted through him, but the imposing of the US force commanders over the MACV Corps Senior Advisers effectively subordinated the MACV/ARVN advisory command structure in the three CTZs to the three US field commands. It was essentially a device for controlling the impact of the US buildup on the existing combat environment by ensuring that the US field force commanders (in the role of advisers) could coordinate ARVN operations with those of their own forces.

(U) Stepping down to deputy involved subtle changes beyond a reduction in status for the former Corps Senior Adviser. He had been the long arm of COMUSMACV and the counterpart of the ARVN corps commander, advising him in accordance with Military Assistance Command, Vietnam (MACV) policies and trying to get him to act on the advice. Now that he was acting for and carrying out the instructions of a US general officer whose attention was properly devoted primarily to his own command, the DCSA, because he was a familiar of the ARVN corps commander and could better appreciate his views, sometimes found himself explaining their merit and reasonableness to the Corps Senior Adviser.

(U) Pressures from different directions that tended to thrust the deputy Corps Senior Adviser into an equivocal position were especially strong with respect to the employment of CIDG forces. US operations in areas adjacent to CIDG camps impinged on the assigned CIDG missions. Special Forces detachments advised the Vietnamese Special Forces (VNSF)/CIDG forces that were under the operational control of the ARVN corps commander. US commanders of divisions and brigades soon realized that the irregulars could perform many useful functions in connection with US operations and insisted that camps and strike forces come under their operational control if located within their assigned areas of operations (AOs). It sometimes fell to the lot of the deputy Corps Senior Adviser, while faithfully acting as a deputy, to resolve conflicting points of view among the US commander/Corps Senior Adviser, US unit commanders, the ARVN corps commander, the VNSF C detachment commander, and the US Special Forces company commander and the commanding officer, 5 SFGA.

(U) In II and III CTZs US forces soon extended their operations to the western border. As the growing US presence became the controlling factor in the prosecution of the war it was inevitable that useful indigenous assets such as CIDG strike forces would more and more come under US operational control. Camps were frequently used temporarily as forward operating bases by US units as CIDG missions were subordinated to the requirements of US forces. This was less so in I CTZ because III MAF operations were concentrated in the populated enclaves near the coast and later in the north near the demilitarized zone (DMZ) and less frequently entered the tactical areas of responsibility (TAORs) of the remote CIDG camps. In IV CTZ, because the old MACV/ARVN advisory-command structure remained and the mobile operations of regular troops did not intervene, CIDG operations continued to be in consonance with normal missions.

Problems Arising from the US Combat Presence

(U) Problems arose when a US division or separate brigade was assigned an AO that included all or part of the TAOR of a CIDG camp. The US commander and his staff, knowing little of the CIDG program and the relation of Special Forces to it, assumed that the A detachment and the camp strike force came automatically under their operational control. Misunderstandings resulted because new US units were continually arriving in Vietnam. The only solution was to define the command/advisory interface in specific detail. II CTZ affords a good example. On 12 March 1967 a message to 5 SFGA defined the command relation in part as follows:

> The following policy statement defines command relations US, USASF, and VNSF/CIDG commanders and units. USASF personnel operating in CIDG camps that are within an area of operations assigned to a US commander are under OPCON [operational control] of that US commander and will conform with his requirements. . . . US commanders operating in an AO must take into cognizance the current operating directives which govern the activities of each CIDG installation in the AO. Changes in missions and activities of the CIDG camps will be made only after this has been done. . . . [source omitted by request]

(U) This was unsatisfactory from the Special Forces point of view. On 8 April 1967 LTG Stanley R. Larsen, commanding general, I FFORCEV/Corps Senior Adviser, issued further instructions to which the commander, 5 SFGA had agreed. Quoting the extract above he added in part:

> Conversely, US commanders assigned to an AO by I FFORCEV are responsible for providing reaction forces for CIDG forces and camps within their AO.
>
> Mutual support will be accomplished, when time and the enemy situation permit, by liaison from the USASF advisors at the B detachment to the senior US commander in each I FFORCEV-assigned AO which encompasses a CIDG camp.
>
> The US commander will provide the liaison officer [LO] with. . . the plan for employment of CIDG forces. The commander of the USASF "B" detachment will coordinate the requirements with VNSF "B" detachment commander. . . . Requirements of the VNSF camp commander for US forces will be transmitted through to US "B" detachment liaison channels to the US commander.
>
> The CO, Co B [5 SFGA] will direct B detachment commanders to attach a liaison officer to each senior US commander assigned an AO which includes CIDG camps assigned to B det. The LO will act as the personal representative of the B det commander during the time the AO is in effect.

. . . US commanders are authorized direct liaison with USASF A Det commanders, however, requests for operational support should be made by the senior US commander to the "B" det liaison officer. When time or enemy situation necessitates, the US commander may make direct contact with the USASF "A" det commander. Under these circumstances the USASF "A" det commander will determine the requirements of the US commander and immediately relay them to the "B" det for coordination with VNSF. The "B" det commander will respond by planning and coordinating to meet the requirements of the US commander while awaiting approval through the VNSF chain of command.

. . . When CIDG units support US forces the CIDG force will operate under the command of the VNSF/CIDG chain of command. US advisors will accompany the forces and coordinate operations with US units.

The CIDG force will retain its tactical integrity. Companies will not be fragmented. The mission will be coordinated to insure that it is within the capability of the designated CIDG force. Appropriate missions for CIDG forces include:

a. Blocking missions requiring maneuver units
b. Screening the flanks of US combat maneuver units
c. Light reconnaissance in force
d. Reconnaissance
e. Guiding US forces
f. Combat operations against local VC and VC infrastructure. . . . CG, II Corps has OPCON of all CIDG forces in II CTZ, therefore, the ultimate authority for approving requests for the use of CIDG forces rests with him [6]

(U) Figure 3 shows the organization of ARVN together with the paramilitary assets in provinces and districts. Fig. 4 shows the organization and command relations of 5 SFGA, Fig. 5 shows the organization of the VNSF, and Fig. 6 shows command and control in II CTZ.

COMMAND SECTION OF 5TH SPECIAL FORCES GROUP, AIRBORNE

(U) When a USASF group takes the field, Special Forces doctrine sanctions a functional regrouping of all elements of group headquarters into an operations center and an administrative center to form a Special Forces Operational Base (SFOB). The organization resembles the British staff system in brigade and division headquarters and is known in the US Army as the directorate staff concept. For Special Forces operations, however, the concept was originally intended to apply to the unconventional warfare mission, where the SFOB is situated in territory under friendly control with operational detachments committed in enemy-held territory.

Evolution of the Concept

(U) In DA Field Manual FM 31-21 of September 1961[7] the SFOB is diagrammed as shown in Fig. 7.

(U) This arrangement raised the operations officer to a status equal to that of the executive officer. It also subordinated the intelligence section to the S3 as in the British staff system. There was no deputy commander in the group. Four years later FM 31-21 of June 1965[8] reflected a change published in TOE 31-105E of 26 September 1963,[9] adding a deputy commander with the result that, in the organization of the SFOB, S3 remained on the staff line (see Fig. 8).

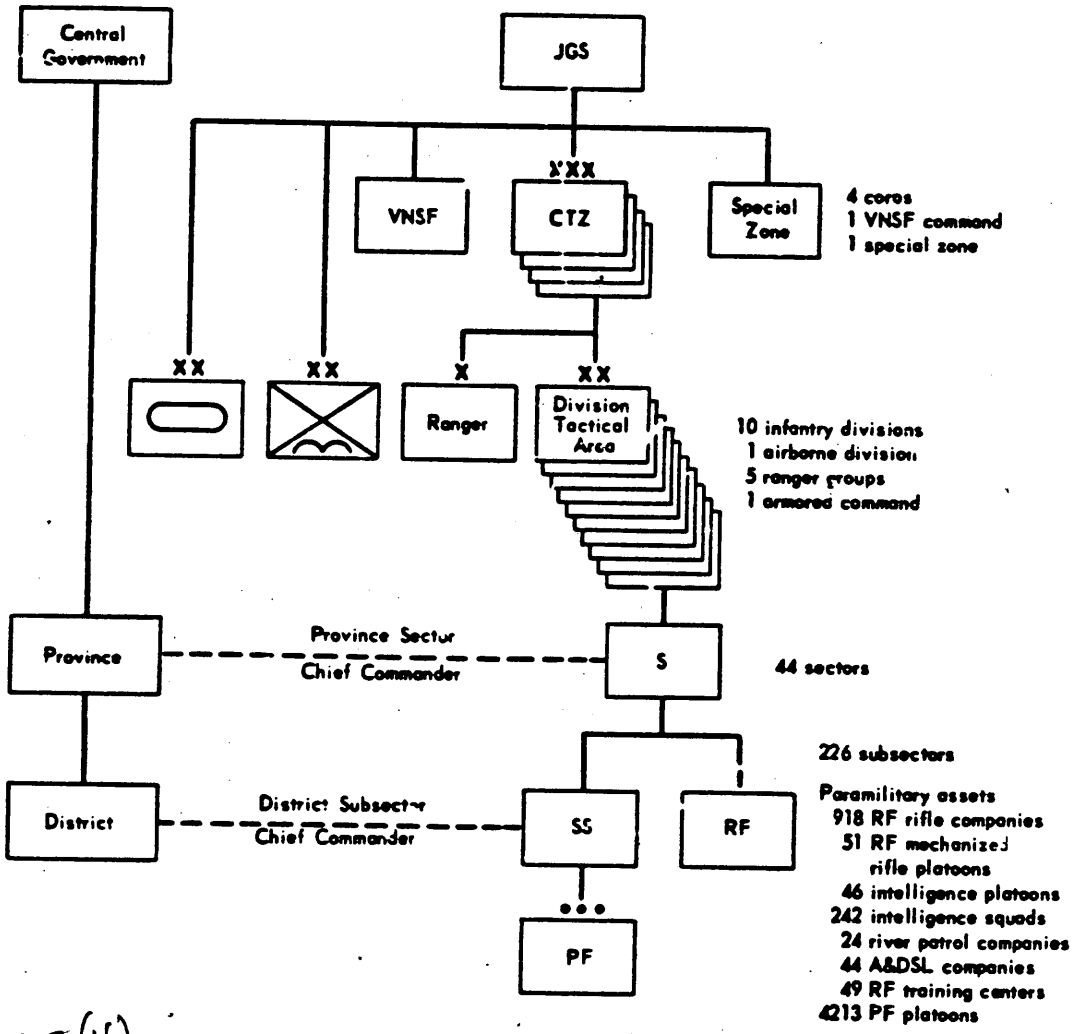

(U)

Fig. 3—ARVN Command Structure, June 1967

UNCLASSIFIED

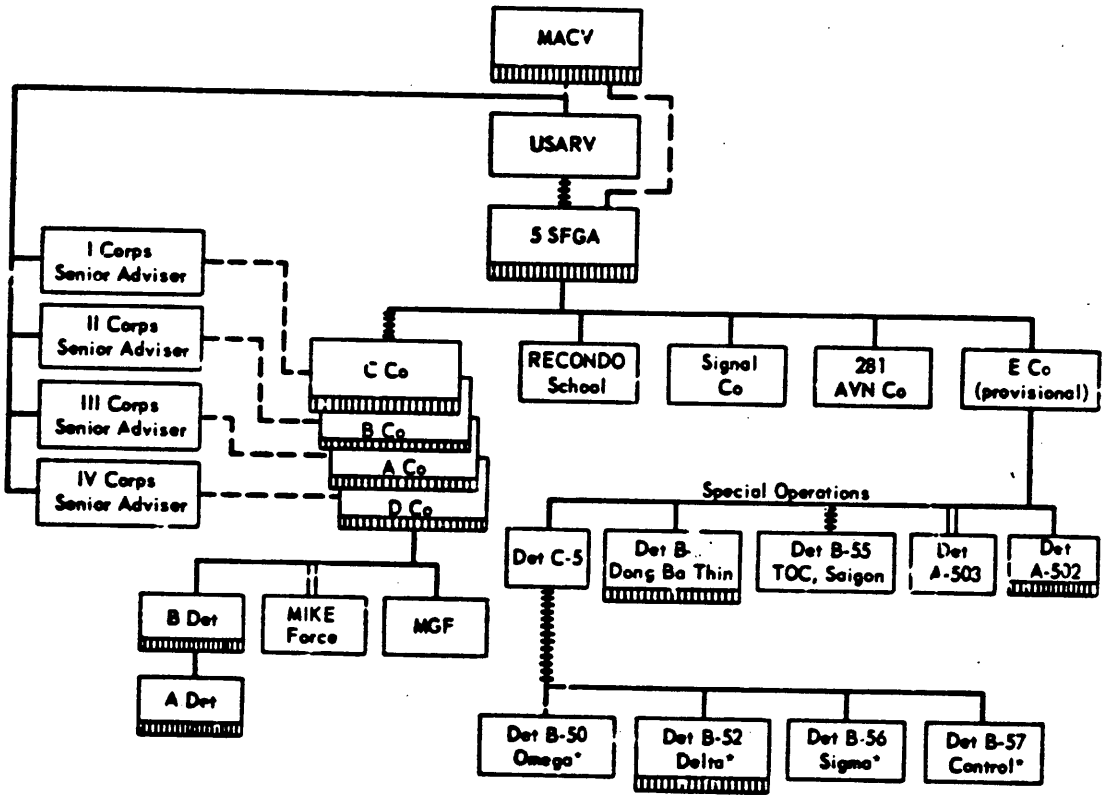

(U) ~~(C)~~

Fig. 4—5 SFGA Command Structure, June 1967

Advisory mission — Command — Command (less OPCON) — OPCON — Joint USASF/VNSF Command

*May be placed under OPCON of corps senior adviser, field force commander, or Commanding General III MAF on order of COMUSMACV.

UNCLASSIFIED

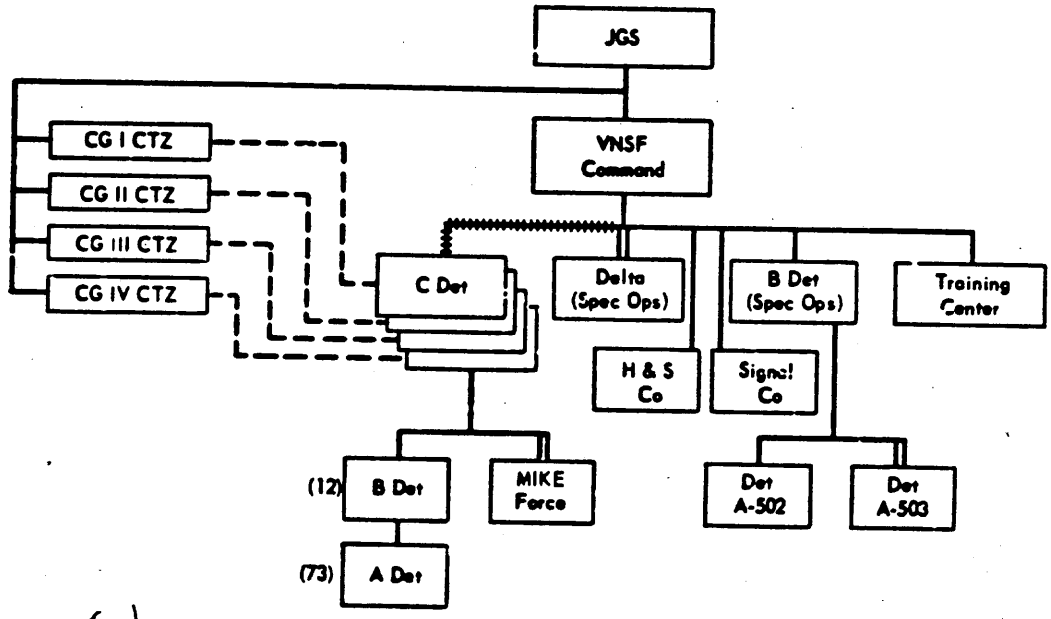

(U)

Fig. 5—VNSF Command Structure, June 1967

Command — Command (less OPCON) — OPCON — Joint command

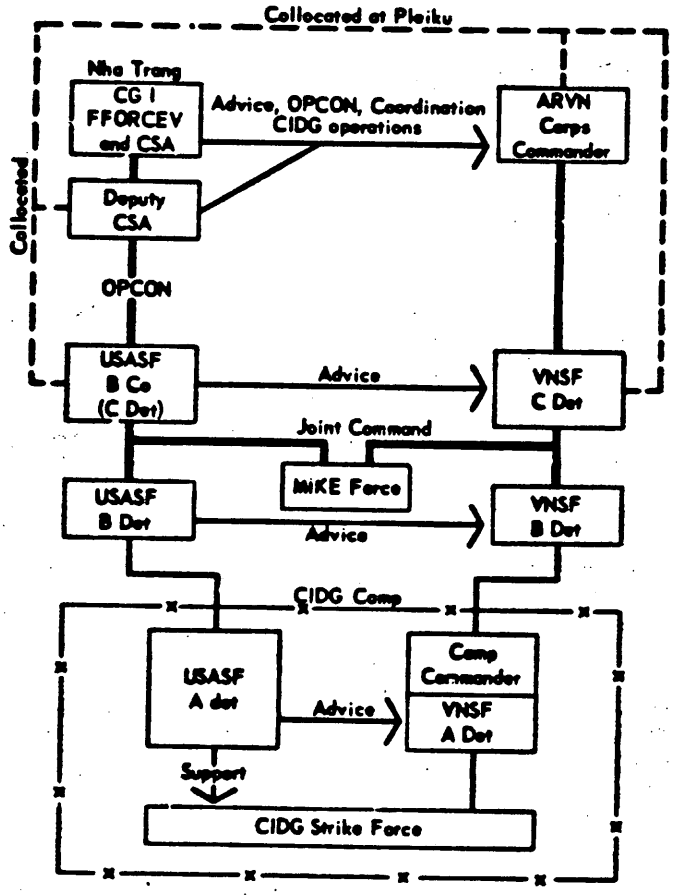

(U) ~~(C)~~ Fig. 6—CIDG Program: Command and Control in II CTZ
CSA, corps senior adviser.

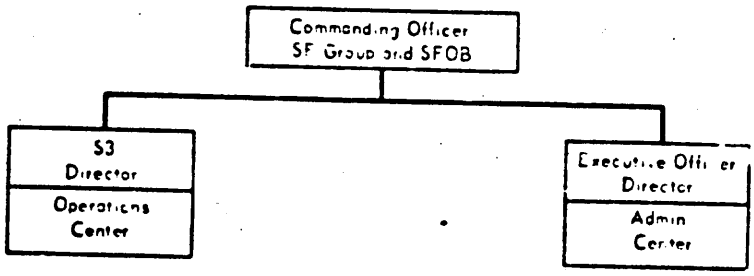

(U) Fig. 7—Organization of an SFOB, 1961

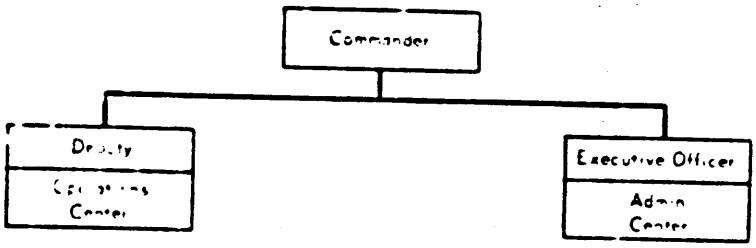

(U) Fig. 8—Organization of an SFOB, 1963

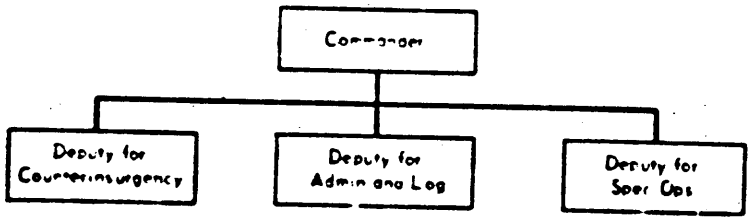

(U) Fig. 9—Organization of S SFGA, FY67

RAC

(U) The Deputy for Administration and Logistics usually remained at Nha Trang. acted as group executive officer and supervised the staff, which remained intact and was not divided into operations and administration centers.

(U) The Deputy for Special Operations functioned as the director of special operations. A weakness existed in the command structure with respect to the administration of special operations units until February 1967, when they were grouped in Co E (Provisional) under the administrative command of the Deputy Commander for Administration and Logistics. The Deputy Commander for Special Operations assumed operational control of a unit when it was assigned a mission. This arrangement enabled the commander to rationalize within 5 SFGA a command problem concerning the administration of special operations that originated in Washington. In theory, all operations conducted by Special Forces are special in nature, but in practice some are invariably more special than others. Even within an organization devoted to the conduct of special warfare, they must be separately treated. The command arrangement that prevailed during FY67 clearly distinguished between more and less specialized programs. Figure 9 is an excellent example of how poorly a bare organizational chart sometimes reflects actual practice. In June 1967 the new commanding officer reverted to the former command system with a single deputy and a group executive officer.

COORDINATION WITH VNSF COUNTERPARTS

(U) ~~(C)~~ Harmonious relations between adviser and advised are obviously essential to effective advisory operations. The adviser only exposes his own incapacity when he complains to his own superiors about the stupidity, want of integrity, laziness, ingratitude, or lack of competence of his counterparts. Their basic character traits are not apt to change. Even if some of his harsher judgments are undeniably correct in the Western scale of values, the burden of establishing a mutually agreeable working relation is on the adviser. The personal aspects of this problem have been dealt with in previous RAC studies (Ref 2, Chap 14; Ref 11, Chap. 3), but three general factors that limited USASF advisory operations should be mentioned here.

Factors Limiting the Advisory Effort

(U) ~~(C)~~ The period following the fall of the Diem regime was a bad one for the VNSF. Many months were required to reorganize the command firmly under ARVN control, inject new blood, and stabilize personnel. Incompetent VNSF camp commanders and detachments during and after the Diem government were the despair of many US A detachment commanders.

(U) ~~(C)~~ Arrogation of Command. A conviction grew among USASF back in the days of the highly integrated detachment of the 6-month TDY that VNSF officers could not properly administer a camp and could not, or would not, plan and aggressively conduct CIDG operations. This prompted the A detachment commander to make every effort to thrust his counterpart aside and assume what amounted to de facto command. There were many instances where such methods succeeded in achieving good short-term results but at the expense of the longer-term objective of developing a VNSF detachment capable of operating a camp independent of US advice.

(U) ~~(C)~~ The root of the problem was the scarcity of properly trained and motivated VNSF officers and NCOs. USASF efforts were therefore directed toward improving the VNSF training center at Dong Ba Thin by upgrading the personnel and increasing student capacity. The first PCS B detachment arrived in Vietnam in October 1964 soon after activation of 5 SFGA and was sent to Dong Ba Thin with a training mission. The training has paid off. The calibre and competence of VNSF personnel slowly improved to the point where it was feasible to phase out the A detachment at Plei Mrong in II Corps during April 1967. When it appeared that the VNSF detachment was doing well without US advisers, other A detachments were scheduled for withdrawal.

The Montagnard Problem

(U) ~~(C)~~ When the CIDG program began in 1961 at Buon Enao it was wholly a Montagnard program. The Green Berets and the primitive highlanders got on well from the start. Before MACV took over the program the USASF detachments often worked directly with the Montagnards without counterpart detachments. Later, with the introduction of the area development concept and extension of the program to lowland areas, VNSF detachments became the command elements advised by the US detachments. The VNSF camp commander's exercise of command was often little more than nominal. The Montagnards distrusted the lowlanders; the Vietnamese regarded the highlanders as savages; the Americans sympathized with the Montagnards and resented the Vietnamese attitude toward them. The Montagnard strike force leaders and the members of the US A detachment therefore tended to work together, isolating the VNSF detachments and bypassing the camp commander.

(U) ~~(C)~~ The abortive uprising of Montagnard strike forces in five camps (Buon Mi Ga, Buon Sar Pa, Bu Prang, Ban Don, and Buon Brieng) in the Ban Me Thuot area of II CTZ in September 1964 alarmed HQ USASF and MACV as much as it did the GVN. It was significant that a number of VNSF personnel were killed, whereas USASF personnel were only disarmed and subjected to house arrest. The lesson was clear: advisers in developing countries must not compromise themselves by becoming unduly attached to an ethnic minority group that might challenge the authority of the government that is host to the advisers.

(U) The CIDG program in Darlac Province suffered severely from the revolt. The Montagnard leaders drew up a list of demands, and the GVN made a number of concessions, one of which was to accept selected Montagnard strike force leaders for the officer-candidate school at Thu Duc.

(U) ~~(C)~~ Later the separatist Montagnard movement began to develop by way of the villages rather than the camps. FULRO (i.e., the Front Unifié de Lutte des Races Opprimées) had, however, penetrated the camps. More trouble occurred in July 1965 at Buon Brieng and in December at Lac Thien, Plei Djereng, and Mai Linh, where small armed FULRO bands appeared and attempted unsuccessfully to subvert strike force personnel.

(U) ~~(C)~~ Fearing a serious outbreak and prodded by US officials, the GVN moved to meet some of the earlier Montagnard demands although opposing FULRO. In 1966 the Deputy Corps Senior Adviser in II CTZ and the commander of B Co in Pleiku were instrumental in persuading the corps commander, LTG Vinh Loc, to take a number of actions to lessen the unrest.

(U) ~~(S)~~ The Montagnard dissidence reduced the effectiveness of the CIDG program in the tribal areas of the Rhade, Jarai, and Sedang. There were few off-site operations of significance in Darlac Province for several months after the revolt. Some camps were closed out, and US detachments were withdrawn although the local mission was far from accomplished. The Montagnard strike forces became less aggressive on operations. They seemed to adopt a wait-and-see attitude about the government of Vietnam (GVN). Viewed strictly in relation to the VNSF problems of command and control at camp level and the US A detachment's advisory and supporting role, the Montagnard camps were the most striking examples of the danger and counterproductiveness of expanding the advisory role beyond its proper limits to the point of arrogating the command function.

Camp Commander Graft

(U) ~~(S)~~ A serious obstacle to rapport at the operating level of the CIDG program—the camp—is the ARVN officer's tendency to graft or "squeeze." For MACV advisers at all levels from subsector and ARVN battalion to Saigon this is probably not a serious obstacle to achieving rapport with those they advise because they do not come directly in contact with it. Although disapproving, MACV advisers can rationalize it as an ordinary custom that even the victims accept—provided it is not too harshly extortive—hoping some day to be in a position to practice it themselves.

(U) ~~(S)~~ The situation is different for the A detachment commander because of the nature of the CIDG program. The strike force soldiers are paid directly from US funds. The cost of camp construction and operation—everything but the pay and equipment of the VNSF detachment—is directly funded by the US. When an A detachment commander and his executive officer suspect that the camp commander is squeezing money from the CIDG, their attitude is wholly condemnatory because it is US money that has been paid through Special Forces channels directly to the individual irregular soldier.

(U) ~~(S)~~ Rackets. The camp barbershop at Plei Me in II Corps affords an example of how simply graft can be organized. The barber was paid from CIDG funds to cut the strikers' hair at no cost to them. If not watched carefully, the camp commander would move in on this situation by requiring the men to have a slip of paper from his office to give the barber before he cut their hair. Ten piastres was paid for the slip. The same racket was worked with the tailor who was also paid from CIDG funds to repair strikers' uniforms at no cost, but the slip of paper for this service might cost 100 piastres. The strikers, being reluctant to pay this sum, would often destroy a torn pair of trousers so that they could draw another pair rather than pay the graft.

(U) ~~(S)~~ The VNSF detachment opened a little store in camp. They bought cigarettes and toilet articles in Pleiku and brought them back on US aircraft to sell to the strikers at 100 percent markup. This was countered by the US detachment's setting up another store, retailing the same articles at a very small markup. Such indirect controls are more effective than direct accusations and also avoid the confrontations between adviser and counterpart that cause the latter to lose face. It is no more than petty graft. As such it is of little importance except as an obstacle to rapport. The American tends to despise his counterpart for what he considers his dishonesty, whereas the

Vietnamese resents US interference and refusal to condone the take-off to which he feels his position entitles him. It is suspected that some VNSF B detachment commanders expect their A detachments to make money in these ways and that they demand a share.

Countermeasures

(U) ~~(C)~~ When COL Francis J. Kelly took command of the group in June 1966 it struck him that the VNSF A detachment officer had been unfairly stereotyped over a period of years in the minds of USASF officers. USASF officers arriving in Vietnam for their first tour of duty often brought with them these prejudices acquired through association with Vietnam veterans at Ft Bragg. He believed that the sterotype that probably had been fairly accurate in 1963 had not changed, whereas the VNSF had definitely improved. The sterotype reflected a VNSF officer possessed of the following characteristics:

(a) Incompetent as an administrator and combat leader.

(b) Lazy (he had a batman in camp and a striker to carry his pack on the trail).

(c) Dishonest and deceitful (a liar and given to graft).

(d) Cowardly.

(e) Brutal in his treatment of Montagnards, whom he despised, whereas the latter were an oppressed minority deserving of the sympathy of the USASF detachmen..

(U) ~~(C)~~ This encouraged the attitude that the only way for an A detachment commander to accomplish anything was to take over as much as he dared of the command function and reduce his counterpart to a figurehead. The commander 5 SFGA believed that over the years USASF advice, the formal training at Dong Ba Thin, and the reorganization of the VNSF command had contributed to a continuing steady improvement and that these ingrained USASF attitudes needed revision. He ridiculed the stereotype and insisted that detachment commanders carry out their advisory duties within limits appropriate to the advisory role. He was particularly firm in his disapproval of partiality toward the Montagnard tribesmen.

(U) ~~(C)~~ The inauguration during FY67 of centralized financial-control procedures within 5 SFGA did much to alleviate the problem of camp commanders' graft. Company headquarters took on much of the burden of financial accountability previously handled at camp level. Such indirect control measures as identification cards for CIDG personnel and weapons checks on paydays were established as requirements at VNSF C detachment level, though not without difficulty. USASF A detachment commanders who continued to function as disbursing officers could then validly withhold funds unless requirements of both USASF and VNSF higher headquarters were met in full. Face-to-face confrontations between counterparts at all levels were thereby avoided and opportunities for counterpart graft were considerably reduced.

Pattern of the Counterpart Relation

(U) ~~(C)~~ With respect to levels of command, outward indications of rapport between USASF and VNSF were more apparent at the company and the B detachment than at group headquarters or the CIDG camps. Curiously, the

tendency to collocate VNSF and USASF C and B detachment working and living space was least evident in I CTZ and rose steadily proceeding south through II and III CTZs to IV CTZ. There seems to be no explanation for this unless it relates to a parallelism discernible in the dual mission. In I and II CTZs a number of A detachments were assigned the coequal subsector mission, but no B detachments had the sector mission. The attitude of these A detachments toward the subsector mission and their manner of carrying it out appeared perfunctory in comparison with III, and especially IV, CTZ where, because B detachments were assigned the coequal sector mission, there was immediate Special Forces command interest in A detachment performance of the subsector as well as the CIDG mission.

(U) Separate, but supposedly parallel, planning in the view of one experienced field officer does not give the US adviser an advantage. He must recognize that the actual decision is not his. Sitting desk to desk with his counterpart and freely discussing matters of planning and policy he is in a much better position to urge the adoption of his advice.

(U) ~~(C)~~ The CIDG Camp. The observer is impressed with how little the VNSF and USASF detachments have to do with each other at many CIDG camps. It might be supposed that some cross-cultural social interaction takes place before, during, or after the evening meal at both officer and NCO levels, but the cross-cultural barriers and pay differential are apparently too great.

(U) ~~(C)~~ At enlisted level there is virtually no counterpart relation except on a duty basis. The US NCO is paid much more than an ARVN company officer. The VNSF NCOs and USASF NCOs have nothing in common beyond technical specialties. It is rare indeed to see one of the latter in the US team house. It is much the same at officer level. The camp commander is seldom seen socializing informally in the team house over a glass of beer.

(U) Social interaction is vertical within detachments, not horizontal between them. Each detachment generally keeps to itself, and in the case of many US A detachments daily existence in the team house is informal to the point where officers and men are scarcely distinguishable except when one individual uses "sir" to address another. In some camps enlisted team members are habitually out of uniform, in undershirts or bare to the waist, even when they sit down to the evening meal.

(U) ~~(C)~~ This relaxation of the outward manifestations of good discipline may be due to youth and inexperience. Detachment commanders with less than 4 years' service were encountered. Because promotion to the rank of captain comes after such a brief period of service nowadays, arriving A detachment executive officer replacements often have very little experience. The officers, however, are well trained and capable of assuming responsibilities that add up to much more than those of company officers in infantry units.

(U) ~~(C)~~ There is another aspect to this youthfulness. There were indications that some of the Special Forces older team sergeants in the CIDG camps in one CTZ were able to have their way in small matters whether the detachment officers liked it or not. Having served and known one another in Special Forces for years, they have tended to operate a sort of closed-circuit secondary administrative net with their friends at the control levels. This type of situation is bound to arise from time to time in any command, but it points up both the need and wisdom for assigning mature company-grade officers to Special Forces A detachments.

EXERCISE OF COMMAND, CONTROL, AND COORDINATION

(U) ~~(S)~~ The 5 SFGA is a unique organization with a unique mission that was not contemplated when the TOE for a Special Forces group was written. Perhaps no headquarters whose units have been placed under the operational control of other commands has ever been able to monitor and influence the conduct of operations to the degree that 5 SFGA has. Without having operational control of its detachments (which in turn do not exercise command over the CIDG assets but only advise the VNSF detachments) HQ 5 SFGA, because it supports the whole CIDG program, actually exercises about as much control over operations in fact as it could if it were officially repossessed of operational control.

(U) The cumulative experience of 5 years' operation of the CIDG program has perfected command and control procedures within the group and command and coordination relations between 5 SFGA on the one hand and, on the other, MACV, I and II Field Forces and III MAF, the VNSF command and the ARVN corps commanders.

Chapter 5

US ARMY SPECIAL FORCES IN THE SECTOR AND SUBSECTOR ADVISORY ROLES

ORIGIN

(U) The US Military Assistance Command began to assign US advisers to sector commanders (province chiefs) soon after the Secretary of Defense authorized this step on 16 December 1961. In the summer of 1964, after successful tests in several districts, the Commander, US Military Assistance Command, Vietnam (COMUSMACV) acceded with Government of Vietnam (GVN) and US Mission concurrence to supplement the US sector advisory program at subsector level in eight critical provinces and in selected subsectors in others. (In military parlance province and district become sector and subsector and the province and district chiefs in their military role are referred to as sector and subsector commanders.) In September he provided guidance to the Corps Senior Advisers concerning the duties of the subsector advisory teams[1] that were then being assigned.

Military Assistance Command, Vietnam, Subsector Team

(U) The standard team, which could be altered (but seldom was) to meet specific needs in each Corps Tactical Zone (CTZ) within the total allocation of personnel for such duty, was composed of five individuals as shown in the accompanying tabulation.

Duty assignment	Rank or grade
Subsector adviser	Major/captain
Assistant subsector adviser	Captain/lieutenant
Operations/intelligence sergeant	E-6
Medical adviser	E-6
Radio operator	E-5/4

(U) Later a sixth member was added, an E-6 light-weapons infantry adviser who usually worked with the Regional Forces/Popular Forces (RF/PF). The teams worked under the direction of sector advisers to broaden the coverage

of the sector advisory program by assisting the subsector commander and his staff in the conduct of the local counterinsurgency campaign. Teams were directed to give attention specifically to the local RF/PF personnel situation; the local intelligence system; military plans, operations, and training; information, psychological warfare, and civic action programs—in short, all matters "that contribute to . . . eventual pacification of the area and to rendering the Viet Cong political-military apparatus ineffective."[12]

(U) Sector advisers benefited enormously from the introduction of the subsector teams. Information respecting the actual state of affairs in the districts had been meager; it consisted largely of what sector commanders chose to pass on to sector advisers. Subsector advisers were able to provide current information hitherto virtually unobtainable for lack of a US presence in the district capitals. Subsector advisers would also be able to check and report to sector advisers on the compliance at district level with orders and directives of sector commanders.

Requirement for US Army Special Forces Participation

(U) By the end of 1964, 103 MACV subsector advisory teams were positioned and functioning. The new program so strengthened and increased the potential of the sector advisory system that MACV wished to expand it more rapidly than the arrival rate of advisory personnel permitted. Because this was before the deployment of US combat troops to Vietnam, with the attendant expansion of the US logistical capability, it was sometimes difficult for MACV to support its advisory teams. Reliance had to be placed on Army, Republic of Vietnam (ARVN) supply channels. In remote districts where there was no ARVN presence, team resupply was uncertain. An obvious partial solution lay within the existing capabilities of the 5th Special Forces Group, Airborne (5 SFGA) with its responsive logistical support system. It might be feasible to assign a dual role to operational A detachments collocated with district headquarters.

Pilot Project

(U) MACV J3, who was responsible for managing the sector-subsector advisory program, decided to undertake a 3-month feasibility test with two A detachments. One was at An Phu in Chau Doc Province, but it was the experience of Det A-331 at Camp Dan Thang, 1 km from Tinh Bien, capital of the district of the same name in Chau Doc Province, that seems to have been the deciding factor. Tinh Bien is adjacent to the VC-infested Seven Mountains area athwart the Cambodian border.

(U) ~~(C)~~ A new detachment commander, CPT Charles J. Mendoza, arrived in mid-November 1964 to find that he had a border-surveillance mission and a populated operational area of delta terain comprising Tinh Bien and Chau Phu districts. The VC were active. In December 1964 they ambushed a $2^1/_2$-ton truck returning to camp with a strike force platoon, killing 5 and wounding 20, and also destroyed a PF village outpost. On 1 February 1965, Det A-331 was provided with civil affairs augmentation of one officer and two enlisted men and was assigned the subsector advisory mission. The district chief was a French-speaking captain of 12 years' service. He had two RF

companies distributed among five posts, nine PF platoon and nine PF squad posts, and some police. The VC responded to the enlarged role of the USASF detachment with increased activity. The right-flank border company withstood [illegible] attacks by what was estimated to be a VC Main Force company.

[illegible] Problems of coordination, communication, and fire support between district forces and the CIDG strike force were gradually solved with experience. A joint Tactical Operations Center (TOC) was established at subsector headquarters [illegible] headquarters. The latter thus [illegible] subsector headquarters. For the first time intelligence col- [illegible] subsector headquarters and lateral dissemination could be [illegible] MACV, the [illegible] seemed to pass as friendly operations [illegible] Four thousand refugees voluntarily [illegible] portions of the Seven Mountains area as the ability [illegible] provide security and perform civic actions increased. [illegible] COMUSMACV accepted the dual-role concept after [illegible]

[illegible] Commander. On 15 April 1965, after 75 [illegible] Mendoza included an analysis of the subsector mis- [illegible] He stated his belief that the detachment capa- [illegible] the border surveillance mission was strengthened by the [illegible] advisory role. The planning and execution of civic [illegible] facilitated. Intensive medical and civic action pro- [illegible] generated increased willingness on the part of the [illegible] VC. This, together with a better coordination of collec- [illegible] the dual role, brought improved results in intelligence. [illegible] was enthusiastic. In his overall evaluation he stated that the subsector advisory task was well suited to USASF and that the [illegible] posts, border surveillance and subsector, were complementary.

ASSIGNMENT OF SECTOR AND SUBSECTOR MISSIONS TO US ARMY SPECIAL FORCES DETACHMENTS

(U) MACV J3 immediately began to use A detachments to expand the subsector advisory program and also to assign the sector mission to several B detachments. After an analysis of the disposition of A detachments in all CTZs the additional mission was assigned to those located near subsector headquarters that had no MACV advisory team. The B detachment at Chau Doc that controlled Det A-331 at Tinh Bien was assigned the sector advisory mission on 1 May 1965. On 18 May MACV J3 announced in a letter to the Corps Senior Advisers[14] the complete plan, already being implemented, for 1965 deployment of subsector advisory teams. Sixty-seven new teams were to be, or had already been, deployed in 1965. Of these, 29 would be USASF with other concurrent missions. Four additional detachments on TDY from 1st SFGA on special RF/PF training missions in Binh Dinh Province would temporarily assume the subsector role until relieved by MACV teams. Deployment of the MACV teams would not be completed until December, but all USASF teams, most of them already in position, would be operational by 1 July. Six of the USASF teams replaced MACV teams deployed under the 1964 authorizations, releasing the latter for redeployment.

UNCLASSIFIED

(U) ~~(C)~~ The Quarterly Command Report, 5 SFGA, dated 15 July states that on 30 June 1965 there were five detachments with the sector advisory mission and 30 with the subsector mission. All the former were in the dual role; 22 of the latter had CIDG subsector missions and 9 were subsector advisers only. By the end of 1965 there were 35 A detachments with a subsector mission and 133 MACV subsector teams. Six B detachments had a sector mission.[17]

The Dual Role at Chau Doc

(U) The Chau Doc B detachment's first 6 months with the sector mission reflect the same enthusiasm and sense of accomplishment in the dual role that are evident in the report of CPT Mendoza of Det A-331. Increased operational effectiveness of all assets—CIDG, RF, PF, and ARVN, supported by a River Assault Group and US and RVN tactical air—stemmed from the establishment of a Sector Operations Intelligence Center (SOIC).

(U) ~~(C)~~ Before the B detachment assumed the sector role there had been no coordination of the several intelligence-collection agencies in the province. Prompt evaluation and dissemination to units in time to be of operational use rarely occurred. After the SOIC had been formed under the guidance of the B detachment, with representation from the sector S2, National Police, Military Security Service, RF, PF, Vietnamese Special Forces (VNSF), and USASF, an efficient intelligence system evolved that enabled the SOIC to coordinate the operations of all units throughout the province. An example of this improved capability occurred on 21 November 1965. At 0800 information received indicated that the VC planned to hold a meeting that evening. A patrol was sent to the area to lay an ambush. At 2145 the ambush was sprung against an estimated 30 VC. Fifteen were killed and nine captured.[18]

The Program Levels Off

(U) ~~(C)~~ During 1965 the number of Vietnamese advised by 5 SFGA tripled to almost 60,000 with the assumption of the sector and subsector missions. By the end of the year about 50 percent of the operational detachments were involved (see Table 1). A general officer suggested that USASF were so well suited to advising sector and subsector commanders that they should become the primary asset for the sector/subsector advisory program. By 30 June 1966 it was planned to have a total of 54 detachments with the sector or subsector role—about 60 percent of 5 SFGA A detachment strength. This plan did not materialize, however. The number of detachments with these missions on 30 June 1966 was no greater than at the end of 1965. MACV sought for further practical ways to strengthen the advisory program and ordered a study in the spring of 1966 entitled "Increased MACV Support for the US/GVN Effort at District and Province Level."[19]

Maturation of the Sector/Subsector Program

(U) After considering a much larger role than had been proposed for the 5 SFGA in the sector/subsector advisory program, the June 1966 study concluded that although USASF participation enhanced the program it would be unwise to increase significantly the number of USASF detachments assigned the

UNCLASSIFIED

dual mission. MACV expected the subsector advisory role to become more demanding as Revolutionary Development activities intensified. USASF A detachments in the dual role might find themselves in an equivocal position—unable to properly execute both the CIDG (or border surveillance) and the subsector advisory missions but unable to give up either. This reasoning was equally applicable to the B detachment with the sector mission. The demands of Revolutionary Development and other sector advisory tasks in addition to controlling its A detachments in the CIDG program might overtax B detachment energies to an extent that they could do justice to neither.

(U) Events bore out the wisdom of this reasoning. It was generally acknowledged by officers concerned that a detachment invariably emphasized one mission at the expense, however slight, of the other. Few A detachment commanders, perhaps none in I and II CTZs, could regard the two missions as strictly coequal, particularly during FY67 when 5 SFGA command emphasis was placed unequivocally on combat operations as a necessary means of establishing security for the people.

(U) The MACV study resulted in MACV Directive 525-15 of 4 July 1966[16] stipulating "the principles and procedures for the organization and deployment of US advisory teams." It noted that USASF teams were particularly suited to areas of limited security because of their responsive logistical support system* and superior self-defense capability, whereas MACV teams could be more readily organized and modified to advise and support varying specific Revolutionary Development situations. Thus USASF detachments were to be considered for the sector/subsector mission where the local North Vietnamese Army (NVA) or VC military threat made the assignment of a MACV team unwarrantedly dangerous.

(U) The Corps Senior Advisers were responsible for deciding which type of team to deploy in each province and district of Vietnam.† Their decisions were presented to the ARVN corps commanders as recommendations. If the latter concurred, the Corps Senior Adviser requested MACV J3 to authorize and program a team.

Composition of Advisory Teams

(U) Flexibility and variation in number and skills of team personnel to fit the needs of particular provinces were stressed. Comparisons of MACV and USASF team structure as set forth in Directive 525-15[17] are shown in Table 2.

Future Participation

(U) ~~(C)~~ USASF participation in the sector/subsector advisory program crested at the beginning of 1966. The decline since has been gradual, but the

(U) ~~(S)~~ *This statement points up a false impression held by some MACV sector advisory teams concerning the availability of the USASF logistical support system to support indigenous assets such as RF/PF. Although such support was provided when need or urgency appeared to justify it, the USASF logistical support system could not be used legitimately for purposes other than the support of the CIDG program.

(U) †This implies that 5 SFGA had operational detachments that could readily be committed whenever a Corps Senior Adviser decided that a subsector commander should have an A detachment to advise him. On the contrary, USASF could provide an A detachment for an additional subsector only by turning over or closing out one of its existing CIDG camps.

system may be likened to a committee without a chairman. It did not work. Province chiefs on their own initiative frequently sought the advice of their military advisers on nonmilitary matters.

(U) In 1966 with the creation of the Office of Civil Operations (OCO) in Saigon to control and coordinate the programs of all US civil agencies under the US Mission, an OCO representative (usually the former US Agency for International Development (USAID) representative) was appointed in each province. Under the new system, sector advisers had to coordinate their advice to province chiefs only with one other US adviser. This arrangement was still insufficiently responsive, however, and on 18 May 1967 the new US Ambassador, Ellsworth Bunker, announced a major departure from the established pattern of administration of US economic and military assistance in Vietnam. The essence of the change was the designation of either the sector adviser or the OCO representative as principal coordinator of all US advisory and assistance programs at province level.

Subsector Adviser

(U) The subsector advisory team is the US advisory presence at the vital district level of government where the lowest appointed representative of the central government deals with the village headmen. The subsector adviser implements US assistance at user level; he and his team are the sole US advisers to the district chief in both military and civil affairs. The USASF A detachment in the dual role—advising a VNSF camp commander with a CIDG strike force and a subsector commander with RF and PF assets—is in a position to coordinate not only intelligence collection and counterguerrilla operations but also the whole blend of the GVN counterinsurgency effort now expressed in the term "Revolutionary Development." The USASF A detachment commander with a dual mission is a key figure in the reestablishment of normal GVN control over insecure frontier districts and the conversion of CIDG assets to RF/PF. As such his objective is to work himself out of his job and turn it over to a regular MACV subsector adviser.

Differences Among the Four Corps Tactical Zones

(U) The commitment of B detachments to the dual role has been limited to III and IV CTZs, where all have had sector or subsector missions and sometimes both. I CTZ had no B detachments through mid-1967; in II CTZ no detachment was given a sector mission. To mid-1967, ARVN corps and division commanders in these areas uniformly resisted the aggregation of CIDG and sector/subsector advisory missions for fear of the impact on their control systems.

(U) Except in a few district headquarters where an A detachment advised the district chief but had no CIDG mission, this meant that about half the A detachments in I and II CTZs were assigned two coequal missions under two separate immediate superiors, a faulty arrangement discussed in a later section. The A detachments showed more interest and greater accomplishment in the subsector role in III and IV CTZs, where their controlling B detachments also advised the province chief. Figures 10 and 11 show the chains of command of A and B detachments in the dual role.

(U)

TABLE 2

Comparison of MACV and USASF Teams

a. Subsector Advisory Teams

MACV team		USASF A detachment	
Duty assignment	Rank or grade	Duty assignment	Rank or grade
SS adviser	Major	Detachment CO	Captain
Assistant SS adviser	Captain	Executive officer	Lieutenant
Medical adviser	E-7	CA PSYOP[a]	Lieutenant
Radio operator	E-5	Operations sergeant	E-6
Operations intelligence adviser[b]	E-7	Intelligence sergeant	E-7
Village [illegible] force adviser[b]	E-7	Assistant intelligence sergeant	E-5
Engineer adviser[b]	E-6	Heavy weapons specialist	E-7
Assistant medical adviser	E-6	Light weapons specialist	E-7
Military police adviser[b]	E-[illegible]	Medical specialist	E-7
CA PSYOP adviser[b]	E-6	Assistant medical specialist	E-5
		Radio supervisor	E-7
		Chief radio operator	E-5
		Combat engineer	E-6
		CA PSYOP NCO[d]	E-6

b. Sector Advisory Teams

MACV team[c]		USASF S detachment	
Duty assignment	Rank or grade	Duty assignment	Rank or grade
Sector adviser	Lieutenant Colonel	CO	Lieutenant Colonel
Assistant Sector adviser	Major	Executive officer	Major
RF PF adviser	Captain	S1	Captain
Assistant RF PF adviser	Lieutenant	S2	Captain
RF PF S-1 adviser	Captain	S3	Captain
S2 S-2 adviser	Captain	S4	Captain
PSYOP adviser	Captain	Civil affairs officer	Captain
Civil affairs adviser	Captain	RF PF adviser[d]	Captain
Sector assisted adviser	E-7	Sergeant Major	E-9
Light weapons instructor	E-6	Administrative supervisor	E-6
Administrative and logistic operations adviser	E-6	Operations sergeant	E-8
Supply specialist	E-6	Intelligence sergeant	E-8
Medical specialist adviser	E-6	Intelligence analyst[d]	E-6
Radio operator	E-5	Demolition sergeant	E-7
Administrative specialist	E-5	Light weapons leader	E-7
Clerk typist	E-4	Medical specialist	E-7
		Supply sergeant	E-7
		Communications chief	E-6
		Radio operator (3)	E-5
		RTT operator (3)[d]	E-5

[a] Augmentation for SS mission.

[b] Additional skill options.

[c] (1) Intelligence personnel, a captain and an E-7, assigned to a 101st military intelligence unit, were stationed at sector.

(2) If sector had an RF PF training center the sector advisory team was further augmented with a captain, senior training center adviser, and an E-8, chief adviser.

(3) When sector advisers were assigned responsibility for the coordination of all US advisers and assistance programs, civil and military, in May 1967, the Detachment was assigned an additional major.

[d] Augmentation for sector advisory role.

RAC

probability is that fewer detachments will have a dual role, although a requirement for some will probably continue until the end of hostilities. This is in accord with the thinking of HQ 5 SFGA from the beginning, as well as with MACV's analysis of the USASF role. On 31 July 1967 there were 24 A detachments with a subsector mission and five B detachments with a sector mission.[18]

(U) The 5 SFGA developed its own concept for the employment of its detachments in the sector/subsector role. It took the form of a cyclic pattern extensional to and compatible with the accepted area development sequence of the CIDG program:

(a) Establish a camp in a remote or insecure area.

(b) Assist and advise the district chief, support Revolutionary Development activities, and build up local security forces.

(c) When counterguerrilla operations have rendered the area reasonably secure, convert CIDG to RF and replace the A detachment with a MACV subsector team.

(U) ~~(S)~~ Actually this was no new concept. The turnover of camp assets to local authority after area development operations had achieved area security was implicit in the CIDG program from 1962 onward, but camp turnover before 1965 usually meant, quite simply, camp closeout and abandonment of the area to virtual VC control. The pro forma planning and drawn-out negotiations for the turnover of a camp before 1965 seldom resulted in continued productive use of the assets by Vietnamese authorities after the ceremonial turnover. Operations ceased with the departure of the USASF detachment, and much of what it had accomplished was nullified. The CIDG assets were real enough, but because the means available to the province and district chiefs in terms of funding, leadership, desire, and sound procedures for conversion were so meager, there was little likelihood that local GVN officials could take over going concern and keep it going. With the inauguration of the subsector advisory program the prospects were much brighter for successful CIDG camp turnover and conversion of personnel to RF PF.

SECTOR/SUBSECTOR ADVISORY OPERATION

(U) To this point, this chapter has dealt with the sector/subsector program in terms of the statistics of USASF participation. In the following pages the context in which advisory teams operate is analyzed.

Sector Adviser

(U) The sector advisory program was implemented in 1962. At that time US advisers were prone to assert that there were "43 counterinsurgencies" because of the power and the authority of each province chief in his own jurisdiction. The sector adviser's task was then more circumscribed than it is now. His job was to advise the province chief in his military capacity as sector commander.

(U) The civil agencies of the US Mission assigned representatives to advise province chiefs in nonmilitary (including police) programs. All US representatives were supposed to coordinate their several advisory and assistance programs, military and nonmilitary, at the province level. The

for Special Forces A detachments in Revolutionary Development, whether or not they have a dual role. The attitude is based on the doctrine that USASF detachments should be committed only in remote or insecure areas, and, when through their efforts the GVN presence becomes firmly established and the area reasonably secure, such detachments should be withdrawn. When the Tactical Area of Operational Responsibility (TAOR) of a CIDG camp becomes sufficiently secure for a Revolutionary Development Team (RDT) to be deployed, it is time to move on. The CIDG strike force personnel should be converted to RF/PF, discharged, or reassigned together with the USASF and VNSF detachments to a new task in an insecure area.

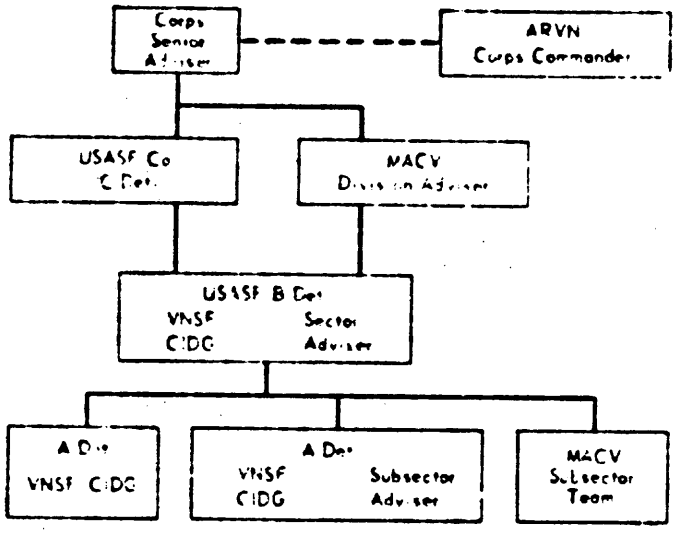

(U) Fig. 11—Command of MACV USASF Advisory Teams in the CTZ: The B Detachment in the Dual Role

(U) Nevertheless it is apparent that the B detachments in IV CTZ in the dual role, with their A detachments assigned coequal missions where appropriate, were heavily involved in Revolutionary Development even before the B detachment commanders became the senior advisers to their province chief/sector commanders. The B detachment commanders tended to singularize the dual mission in a constructive way in the environment of pure insurgency/counter-insurgency in which large-scale conventional operations did not impact. As one successful B detachment commander observed in May 1967, "Every VC guerrilla we kill is in support of Revolutionary Development," a statement with which HQ 5 SFGA would have concurred.

Det B-34, Song Be, April 1967

(U) Det B-34 at Song Be in Phuoc Long Province, the northernmost in III CTZ, affords an example of the complexity of the task that confronted a B detachment commander with a dual mission. Phuoc Long Province was overrun

(U) The dual role has probably been most effectively performed in IV CTZ, where in 1967 the combat environment still evidenced a pattern that no longer obtained in the other CTZs. The flat terrain with few roads and many waterways, inundated during the height of the rainy season, was a factor in the difference, but of more significance was the absence of US Army and other Free World Military Assistance Forces (FWMAF) and the VC/NVA Main Force units they seek to destroy. In IV CTZ it was still insurgency/counterinsurgency unadulterated by the superposition of large-scale FWMAF conventional

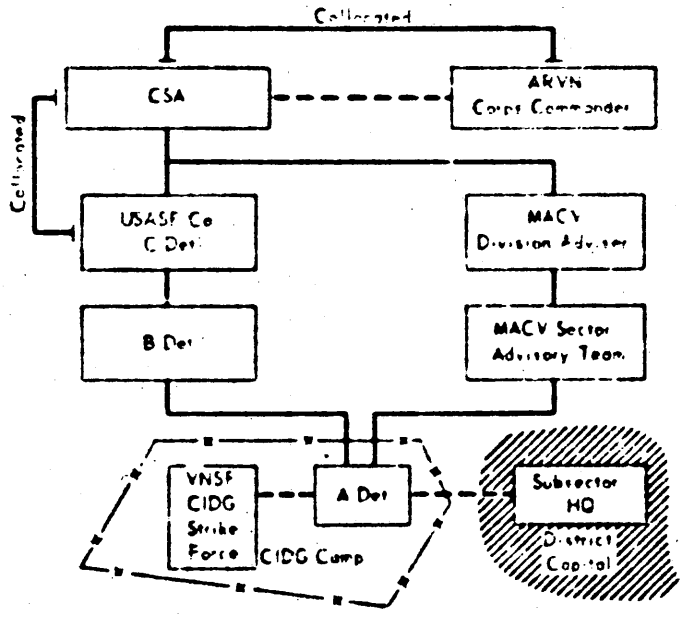

(U) Fig 10—Command of MACV USASF Advisory Teams in the CTZ: The A Detachment in the Dual Role

With the establishment of the US Marine Amphibious Force and US Army field force headquarters, the senior US commander in I, II, and III CTZs become the Corps Senior Adviser, and the former Corps Senior Adviser become his deputy.

operations that take precedence. Rarely in IV CTZ have USASF-advised CIDG or RF forces come under the operational control of a US commander for a strictly military operation, as distinct from counterguerrilla operations that are inseparable from the pacification program. In IV CTZ, CIDG operations other than those conducted under the border-surveillance mission (even these are really denial operations) have been essentially clearing operations in preparation for, or securing operations in support of, Revolutionary Development.

Participation in Revolutionary Development

(U) The attitude of HQ 5 SFGA and the company commanders in the four CTZs has been mixed, largely negative, with respect to any but a marginal role

(U) The long axis of the province runs southeastward from the Cambodian border with the southwestern boundary on the Mekong River and the desolate and infertile Plain of Reeds to the north. The Province has 40 km of land border with Cambodia. Most of the people live on the rich agricultural land along the river. The terrain is flat—at no point does it rise more than 10 ft above sea level. There are four principal routes of east-west communication: the Mekong; Highway 14 from northwest to southeast the length of the province, parallel to the river; and two canals that cross the province, running due east from the Mekong (see Fig. 12). The road was cut by the VC near the junction with Highway 4, the route to Saigon, and the peasants of this potentially prosperous province were unable to market their produce there, at least without paying a VC tax. The only other way to reach Saigon by surface travel (except via the South China Sea) is by canal, but these water routes were largely controlled by the VC. A new camp was under construction near My An to reestablish GVN control along the northernmost canal.

(U) Before March 1967, when Det B-43 took over the dual role, MACV advisory teams had been assigned to the province and districts. There were two A detachments in the province, controlled directly by the company at Can Tho, but no B detachment.

(U) ~~(C)~~ Friendly Troops. In the spring of 1967 there were neither FWMAF nor ARVN troops in the province, although an ARVN infantry battalion entered it occasionally to go through the motions of a search-and-destroy operation.

(U) ~~(C)~~ There were three A detachment camps, two of them in the dual role. MACV subsector teams were in other districts. All CIDG camps were authorized four strike-force companies, two reconnaissance platoons, and a PSYOP squad. A Mobile Strike (MIKE) Force of 800 Chinese and Cambodians was located within the province but was controlled by D Co at Can Tho. The province had 23 PF companies, 87 PF platoons, and 64 squads for a combined total of 10,000 paramilitary rifles. US Army aviation, a MILPHAP team, two Air Force FACs, an intelligence team, a naval assault group, and a boat company provided support.

(U) ~~(C)~~ Enemy Troops. No known Main Force units were in the province, but there was a provincial battalion—the 502—with four companies, one of them a weapons company. Each of the five districts had in addition a district mobile company. Small guerrilla units were stationed in the villages.

(U) Revolutionary Development. Five Revolutionary Development Teams (RDT) were in the province. The authorized strength of an RDT is 52, 36 of whom are security personnel. The role of the military (actually paramilitary) is to support Revolutionary Development by seeking out and eliminating VC. An example of the positive influence of the USASF advisory effort in the province is reflected in an incident that occurred on 18 March 1967. An RDT was attacked and overrun. Several members of the team were killed, including three girls. The team was withdrawn and reequipped and was back on site and functioning within a few hours. Without the US advisory presence at sector level the team would undoubtedly have been withdrawn permanently and the project ended.

(U) An RF training center is located in the province, but at a time when the RF was becoming increasingly involved in Revolutionary Development the training center did not include such instruction in its curriculum. The sector

by the VC in 1965. The GVN has slowly been regaining control since. The Stieng tribe, a backward one, comprises 40 percent of the sparse population. In April 1967 only the areas immediately surrounding the province and district capitals were fairly secure.

(U) NVA units moved through the province in transit to other areas but the immediate threat was the estimated 1000 local VC. A VC company in each of the four districts directed its efforts toward nullifying Revolutionary Development. A new CIDG camp was being reconstructed very rapidly in previously untouched terrain at Bunard in the southern part of the province. It would take only 30 days to complete. US engineers were completing a strip beside the campsite that would take a C-123. A US infantry battalion was in the vicinity to protect the engineers. Three Revolutionary Development Teams were deployed and a fourth was undergoing training at Vung Tau. Five Montagnard teams were also performing Revolutionary Development among the Stieng.

(U) A recently assigned lieutenant colonel commanded Advisory Team 94 at Song Be. Its principal element was Det B-34 with augmentation for the sector mission (see Table 2). Det B-34 controlled four A detachments, all with CIDG and subsector advisory missions, one of them with an additional border-surveillance mission. Advisory Team 94, however, included other advisory assets, as shown in the accompanying tabulation.

Advisory unit	Officers/men
US Air Force Forward Air Controller (FAC) team	4/6
MACV intelligence team	3/4
Military Public Health Assistance Program (MILPHAP) team	4/14
ARVN infantry advisory team	2/2
Ranger battalion advisory team	2/2
US Army signal battalion team	0/12
Aerial port team	0/4

(U) The officer commanding Det B-34 and Advisory Team 94 was provided with these special advisory and technical elements to function as sector adviser in addition to controlling four CIDG camps. The activities incident to rapid construction of a new camp and the presence of a US battalion and ARVN infantry and ranger battalions in addition to RF/PF units to support Revolutionary Development obviously required the sector adviser/B detachment commander to put in a full day 7 days a week.

Det B-43 at Cao Lanh

(U) Cao Lanh is the capital of Kien Phong, a province with a population of about 300,000. About 28 percent of the population belongs to the Hoa Hao minority sect, which once resorted to armed insurgency but came to terms with the GVN after the fall of the Diem regime. Although a minority, the Hoa Hao control the province from the GVN standpoint. One hundred forty-two of the 216 hamlets, comprising 78 percent of the population, were considered under GVN control in the spring of 1967.

adviser succeeded in correcting this and in expediting the Revolutionary Development mobile training team (MTT) program. The MTTs were formed from RF personnel who were sent to Saigon for training and returned to move about the province instructing RF units in Revolutionary Development programs and methods.

(U) Det B-43 also persuaded the province chief to direct his district chiefs to adopt the USASF offensive/defensive concept by establishing a TAOR around each village where an RDT was located. District boundaries were ignored if the tactical situation made this desirable. The RF/PF units designated to provide security for the RDT were ordered to defend the village by vigorously patrolling the TAOR. This was in sharp contrast to the ingrained RF practice of static defense.

(U) ~~(C)~~ Operational Concept. In the dry season, movement is helibrne or cross-country on foot. Water movement is restricted to canals and rivers, but during the rainy season much of the area takes on the characteristics of a lake. Footmobile operations become impracticable. Movement is helibrne and waterborne. Assault boats and patrol air-cushion vehicles (PACVs) can move about with great freedom. As the first infrequent rains were beginning in early May 1967 the sector adviser/B detachment commanding officer was completing his rainy-season plan of campaign. He expected the VC to make a major effort during May and June, before the high water in July, and believed that a mortar attack on 3 May on the half-built floating camp at My An on the cross-province canal signaled the beginning of it. During this period the terrain would be too soft and wet for footmobility and surface transportation but not wet enough for the airboats to move freely. Most of the VC units would try to cross over to Cambodia by July. The plan, therefore, was to employ both CIDG and RF assets to (a) seal off the Cambodian border in the Hong Ngu District, (b) sweep the province to force the VC units to concentrate and isolate them in their strongholds, and (c) systematically attack and reduce these strongholds when the terrain became sufficiently wet for the airboats.

(U) A few PACVs, all that were available in-country, were used on a trial basis with great success during October–November 1966. More were expected to be available for the 1967 campaign. MIKE Forces and boats would be concentrated at Cac Lanh. An airboat site, bermed and bunkered, was just being completed. Land, air, and water operations employing joint strike force and RF assets were to be launched from Cao Lanh.

(U) These examples indicate the scope of the command and the advisory tasks of the B detachment in the dual role. They are typical of other B detachments in III and IV CTZs.

Coequality

(U) The concept of two coequal missions for an operational A detachment is valid provided the detachment is under the operational control of an immediate superior who is also charged with both missions. This precludes subjecting the detachment to the conflicting pressures of two immediate superiors, each striving to obtain the utmost from the A detachment to accomplish the particular mission with which he is charged. The concept of coequality is a dubious one, however, when it involves two dissimilar missions under two immediate superiors. The principle was stated categorically long ago: no man can serve two masters (Matt. 6:24).

UNCLASSIFIED

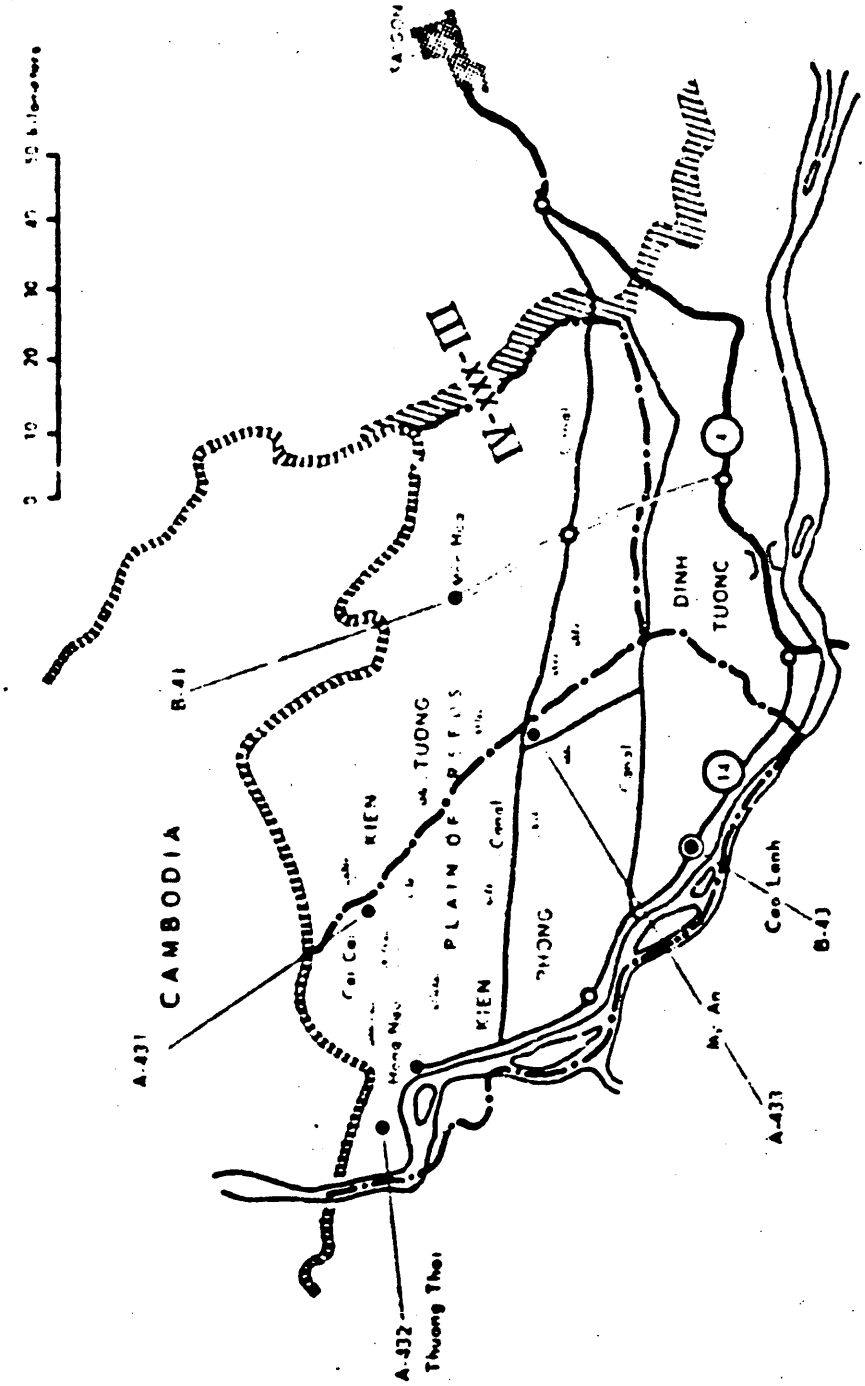

Fig. 12—Kien Phong Province and Adjacent Areas

UNCLASSIFIED

its coverage to districts unsafe for MACV advisory teams. Some B detachments were assigned the subsector role on the same premises. B detachments seem to have been assigned the sector role, however, largely for the reason that all or most of the A detachments under them were assigned the subsector mission. This arrangement was limited to III and IV Corps Tactical Zones (CTZs) and it worked well, especially in the latter, where the war still retained the characteristics of insurgency/counterinsurgency before the commitment of US troops. In I and II CTZs the A detachments in the dual role worked for two masters and the subsector mission undoubtedly suffered, especially during FY67 when 5 SFGA placed strong emphasis on operations that killed VC.

(U) Such is the Vietnam experience of USASF in the dual role, but what of the future? The Vietnam context may or may not be duplicated elsewhere in the future, and because of the inherent skills and cross-training of USASF operational detachments the question of a dual role may again arise. The firm attitude should be to avoid placing a detachment in the false position of attempting to serve two masters. Putting two missions under an immediate superior charged with both is a workable arrangement.

Motivation

(U) Operational A detachments in the dual role in I and II CTZs were less motivated toward the subsector mission. Some camps were several kilometers distant from subsector headquarters, had no permanent representation there, and no means of surface transport. In one camp the subsector role subsided into nothing more than providing food for the first 90 days to newly established refugee villages. In another the A detachment commander had never met the MACV sector adviser. I CTZ had no B detachments. In II CTZ no B detachment had a dual role. A detachments with subsector advisory mission in those two CTZs had no USASF control detachment with a direct responsibility for seeing that the subsector mission was carried out.

Adequacy of Team Structure

(U) B detachment commanders generally considered that they were understaffed for the dual role. MACV and 5 SFGA apparently concurred because an extra major was assigned when sector advisers were made coordinators of all US advice and assistance, civil and military, at the province level. The A detachment at full strength was overstaffed by half for the subsector mission alone, but instances of this were infrequent after 1965. On the other hand, in the spring of 1967 many A detachments were understrength because of 5 SFGA personnel requirements for additional special operations units. The subsector mission was the first to suffer when an A detachment with the dual role fell understrength.

US Army Special Forces Participation in Revolutionary Development

(U) Revolutionary Development cannot take place on the battlefield. In areas where US and other Free World Military Assistance Forces (FWMAF) are conducting active operations against VC/North Vietnamese Army (NVA) Main Force units it cannot progress and should not be initiated. USASF participation (see also Chap. 12) and motivation at operational levels to participate

RAC

(U) Thus an A detachment with CIDG/subsector missions under a B detachment with command and control/sector missions can be expected to fulfill the dual role unequivocally, but an A detachment with CIDG/subsector missions that reports to its B detachment for one and to a MACV sector advisory team for the other is trying to serve two masters. Who should rate and who should endorse the efficiency report of the A detachment commander? HQ 5 SFGA did not view with favor a MACV sector adviser's rating its A detachment officers; yet initially this occurred if the MACV sector adviser was senior to the B detachment commander. This problem finally disappeared in the summer of 1966 when the commander 5 SFGA persuaded MACV that officers of A detachments in a dual role should be rated by their B detachment commanders.

Termination of the Dual Role

(U) A headquarters is frequently tempted to prolong an anomalous arrangement that has been resorted to as an expedient after the conditions that justified it no longer obtain, especially if the arrangement has worked reasonably well. Since January 1967 the number of detachments committed to the dual role has decreased. Detachment B-31 at Tay Ninh reverted to the single command and control mission in June 1967 after having had both sector and subsector missions for 2 years. It appears that a MACV team might have replaced Det B-31 earlier in view of the reduction in the VC threat resulting from operations by US forces in War Zone C and the heavy demands placed on the detachment commander by the augmentation of a number of special advisory and technical elements to carry out a complex sector/subsector mission. The assignment of responsibility on 18 May 1967 to the sector adviser for coordinating all US assistance and advice to the province chief was a factor in relieving Det B-31 of its sector and subsector missions.

SUMMARY COMMENT

Doctrine for the Future

(U) ~~(S)~~ In his Quarterly Command Report dated 15 January 1966, Col William A. McKean, CO 5 SFGA, made the following assessment of the coequal sector/subsector role:

> This mission maximizes the goal of an integrated effort on the part of the Vietnamese to coordinate and cooperate with their separate forces and agencies in getting on with the war. The USASF advisor who wears two hats plays the greatest role in integrating the Vietnamese in all aspects of counterinsurgency effort. The military operational effort is coordinated among CIDG, RF, PF, ARVN, National Police, the Navy and the Vietnamese Air Force. The intelligence collection pools the assets of agent nets, National Police and MSS [Mission Support Site].[15]

(U) In the situation that prevailed in Vietnam in 1965, USASF detachments constituted a ready asset that Military Assistance Command, Vietnam, (MACV) could use to accelerate the subsector program and also [because of the self-defense capability of US Army Special Forces (USASF) detachments] to extend

Chapter 6

INTELLIGENCE

(U) This chapter analyzes the intelligence mission of 5 SFGA in terms of its experience since mid-1964. The analysis is cast in the framework of three closely related areas: the major obstacles and problems that have prevented a more effective implementation of the intelligence mission; the factors that underly these problems; and, in terms of existing needs and capabilities, possible steps to ensure an improved intelligence effort in the future.

(U) The analysis assumes that intelligence is both a product—strategic, combat, and internal defense intelligence and counterintelligence—and a process—collection, reporting, evaluation, interpretation, and dissemination. It is also assumed that the product and process are inextricably related. Thus from an operational standpoint accurate intelligence that is irrelevant is as useless as relevant intelligence that is inaccurate. Similarly, intelligence that is timely but lacking in credibility is just as likely to be ignored as intelligence that although credible arrives too late to be of use to the consumer.

THE MISSION: CHANGING INTELLIGENCE REQUIREMENTS

(U) The heart of an effective intelligence operation is the relation between producer and consumer. Of critical importance to the establishment and maintenance of a satisfactory relation is the definition of mission responsibilities. In the absence of a well-defined set of objectives and practical guidelines for pursuing them, intelligence personnel at the various levels of effort cannot hope to produce finished intelligence that, in the words of one observer, will qualify as "timely truth well told."

(U) In the premise that ends should determine means, it is essential that mission responsibilities be relevant as well as explicit. In the absence of relevant criteria, means may determine ends, or, more precisely, capabilities are apt to determine significance.

(U) ~~(S)~~ The intelligence mission of 5 SFGA as defined appears to have changed little in the period 1964–1967. As in the earlier period, detachments were expected to assist their counterparts, and through them the GVN, to develop an indigenous intelligence capability and to target collection activities on the local guerrilla and the substructure. Concomitantly, USASF personnel were also responsible for an independent intelligence and counterintelligence effort related to their own security.

in Revolutionary Development has varied with the appropriateness and practicability of the effort in the variform combat environment of Vietnam. In many parts of I, II, and III CTZs where the relatively large-scale operations of conventional units made Revolutionary Development programs wholly inappropriate even though they were sometimes attempted by the Government of Vietnam (GVN), USASF operational interest and emphasis were geared to those of US troops—to kill enemy personnel and destroy enemy mobile combat units. But in certain provinces in the Delta that were not battlefields in the sense that the demilitarized zone (DMZ) was, where the enemy was the local guerrilla and the GVN presence was principally Civilian Irregular Defense Groups (CIDG) and RF/PF, operations were of the clearing or securing type in support of Revolutionary Development. In this environment USASF detachments in the dual role were properly heavily involved. It would be difficult indeed for a B detachment to stand aloof from Revolutionary Development when much of the advisory task involved containing and if possible destroying local guerrillas so that several Revolutionary Development Teams (RDTs) could get on with their tasks unhindered and the villagers with whom they worked, feeling reasonably secure, could cooperate. It may be correct to hold that USASF detachments should not be committed in such an environment, but this in effect would be to say that USASF detachments should not be committed to a counterinsurgency mission.

Team Concept

(U) ~~(S)~~ USASF operational A detachments were deployed to Laos in 1959 and were assigned as half teams to train and operationally advise regular Laotian units—not quite the purpose for which the A detachment was designed. Once again USASF versatility was demonstrated in Vietnam by the performance of A and B detachments in the dual role. The essence of this versatility is the team concept—selected skilled individuals, cross-trained and integrated to form a motivated group. Such a team can take on an unfamiliar advisory mission and adapt to it even though the team is weak in some desirable skills and possesses others not absolutely required. It seems reasonable to expect that USASF detachments will be called on in the future to perform various missions in the context of counterinsurgency for which they were not exactly designed. This is the unique strength of USASF that sets it apart from the rest of the US Army.

out the IACs and upgrade the collection efforts of A and B detachments. The expanded intelligence program required a revision of all existing directives and reporting procedures. Emphasis was placed on timely acquisition, accurate reporting, speedy analysis, and rapid dissemination to users.

(U) ~~(S)~~ Thus 5 SFGA became a chosen instrument, intimately linked with the countrywide intelligence network for collection, and for analysis and dissemination at intermediate levels, for the US ground-forces effort as a whole. To this expanded mission 5 SFGA brought a capability for internal defense intelligence collection and an adequate organic intelligence organization for its own needs. It did not have the professionally qualified intelligence personnel necessary for the expanded intelligence role. It was feasible to augment with intelligence (but non-USASF) specialists but not feasible to make military intelligence specialists of USASF personnel.

Factors

(U) ~~(S)~~ Although these and other related developments of the period considered may be accounted for in terms of the need for improved combat intelligence, they also reflected the growing involvement of 5 SFGA in a variety of other activities directly related to the support of conventional combat operations. These activities generated pressures that were diverse in origin, ranging from the assignment of additional responsibilities to USASF detachments and the desire of US commanders to place Special Forces detachments directly under their control to the demands placed on 5 SFGA by the changing character of the war itself. These increasing demands, especially the requirement to expand the Greek-letter projects, necessitated a thinning out of the A detachments. In the spring of 1967 most of them were two or three men short of authorized strength. With the exception of IV CTZ the impact of the US combat presence prompted an expansion of intelligence support functions at the expense of activities that before 1965 were the basis for the USASF presence in the RVN.

(U) Recognition of the need to strengthen combat intelligence capabilities and to enlarge the intelligence effort against the communist infrastructure caused a transformation in the intelligence orientation of 5 SFGA. The shift in priorities was less the result of a conscious decision than the consequence of the imposition of added responsibilities on 5 SFGA following the arrival of US combat forces. An important factor lies in the access of US field commanders to the decision-making process resulting in the increased subordination of the CIDG program to the US command and control apparatus. The combination of the need for more and better combat intelligence and opportunity, as reflected in the ability of US commanders to secure the services of USASF personnel to meet this need, prompted a reallocation of human and material resources and a realignment of intelligence mission priorities.

(U) The importance of access becomes more apparent if viewed in the context of the producer-consumer relation. Before 1965, when the intelligence mission of 5 SFGA was primarily advisory in character, the principal consumers of the product were the Army of the Republic of Vietnam (ARVN) and the USASF itself. With the buildup of US forces there was a third consumer, and competition ensued between the ARVN and US field commanders not only for the intelligence product but for operational control of the CIDG strike forces.

The problem is more than one of emphasis. It concerns the nature of the conflict itself and, by implication, the informational requisites to deal effectively with the challenge of insurgency—a question of the relevancy of the intelligence product.

(U) Relevancy may be defined as a function of threat, rather than perceived threat. Ideally the two are one. When irrelevancy develops in the intelligence product there has been a needless expenditure of resources directed against the symptoms of insurgency rather than the disease. The consequences for the implementer of the intelligence mission are no less critical because the reputation of the producer is tied to the quality of the product, just as the quality of the product is a function of the willingness of the consumer to act on it. Intelligence of a type that experience reveals to be irrelevant is likely to be ignored, and when this happens the mission becomes irrelevant.

(U) This is by no means to suggest that the intelligence produced by 5 SFGA is ignored or that the mission has been discredited in the eyes of the consumer. It is to suggest that with the buildup of US combat forces the tendency has been to view the threat to the RVN as essentially military in nature and conventional in form, and to suggest that such a view is an oversimplification in which military operations by NVA and VC Main Force units are the most obvious, but not the most serious, aspect of the threat to the GVN. Finally, it is to suggest that the intelligence mission of 5 SFGA as carried out was increasingly reoriented in accordance with this view, with too much emphasis placed on combat intelligence and too little on internal defense intelligence. Toward the end of the period under review, however, as the contribution of the intelligence augmentation personnel was reflected in increasing efficiency of process and refinement of product, MACV and group headquarters gave indications of a renewed emphasis on the area development and internal defense intelligence effort.

(U) It is easy to attribute defects in the intelligence product to shortcomings in the process and to blame US combat commanders for utilizing USASF capabilities in support of their operations and the USASF itself for willingly becoming involved at the expense of the original mission. Such explanations emphasize the obvious while ignoring the basic problem of a foreign military force that must gather intelligence in an alien and hostile environment. Historically, Western military expeditions in such a situation have invariably recruited indigenous personnel who, in addition to other services they provided, acted as an information channel from and to the local population. US combat forces arriving in Vietnam found that USASF had already developed such assets.

(U) ~~(S)~~ The problem for US combat forces was particularly acute in areas where the insurgents were indigenous to the region and where time had afforded them opportunity to develop their elaborate covert infrastructure. When, as in this instance, the foreign combat forces lacked both experience in the collection of internal defense intelligence and an appreciation of its significance, and when the GVN for its part was not anxious to have the US troop units probe into sensitive matters, the tendency was for USASF to accept the demand of area commanders for combat intelligence or for support services related to conventional operations and to rationalize this acceptance by assuming that what was being collected was what ought to be collected, or what was being done was what ought to be done.

(U) What changed during the period was the nature and magnitude of the conflict and the nature and extent of American involvement. As the war became more conventional in character and the buildup of US forces attained significant proportions, the intelligence mission of 5 SFGA as carried out underwent a gradual transformation.

(U) Before mid-1965 the defined intelligence mission and the mission as carried out were basically the same; with the exception of IV CTZ, such has not been the case since. A noticeable shift in priorities occurred with the buildup of the US combat-troop presence. Formerly area development and border surveillance and the production of intelligence related to them had first priority at A and B detachment levels. Although intelligence gathered by detachment personnel and their counterparts was reported to other commands, this was done in conjunction with and not at the expense of primary mission responsibilities. Producer and consumer were the same, i.e., USASF-Vietnamese Special Forces (VNSF)/MACV-Joint General Staff (JGS). The intelligence mission was keyed to a Type II low-intensity insurgency environment in which USASF personnel functioned as a separate but integrated component of the overall US advisory effort. Until 1965 this was compatible with the situation in the Republic of Vietnam (RVN). Discrepancies between stated purposes and practices were minimal.

(U) In the second quarter of 1965, however, what had been a Type II low-intensity conflict fought by the Vietnamese themselves with US advisory assistance and combat support became Type I and more conventional in nature. As the character of the war changed so too did the intelligence mission of 5 SFGA in actual practice.

(U) ~~(S)~~ The rapid buildup of US forces signaled the beginning of an active commitment on the part of the US to the defense of South Vietnam—a commitment that took precedence over the MACV advisory effort and generated pressures to subordinate certain aspects of the CIDG program to the needs of US combat forces. The intelligence mission is the most striking example. Since the newly arrived American units were unfamiliar with the combat environment they naturally looked to nearby A detachments with their VNSF-CIDG-RF/PF components as prime sources of intelligence. As time went on USASF became involved in a variety of intelligence support activities ranging from the staffing of the RECONDO school to the conduct of projects Delta, Sigma, and Omega—whose primary purpose was to gather intelligence for conventional forces.

Augmentation

(U) ~~(S)~~ Toward the end of 1966 MACV decided to exploit the full potential of 5 SFGA as a vehicle to provide combat intelligence to the field forces. The group added counterintelligence, collection, and source control branches to its intelligence section and established an Intelligence Analysis Center (IAC) in each letter company. In October a radio research unit was assigned to the group. To upgrade the intelligence capability of 5 SFGA, MACV in the spring of 1967 assigned an unnumbered military intelligence detachment of 110 specialists. Five teams were formed, each containing the full range of intelligence skills—counterintelligence/counterespionage, collection, analysis, photo interpretation, interrogation, and order of battle. One remained at Nha Trang and the others were assigned to the letter companies in the four CTZs to flesh

In a situation where one of the consumers possessed access to the decision-making process and the others did not, the outcome was predictable. It was in keeping with these circumstances for the intelligence mission to become less advisory in character and more directly supportive of the overall US military effort. That such has not been the case in the IV CTZ is attributable to the limited US presence there, which has provided no basis for competition between consumers.

(U) The shift in priorities was not entirely the result of pressures by field commanders. In part at least, USASF contributed to the shift by a commendable eagerness to assume additional responsibilities, particularly in the area of training and the conduct of missions to gather intelligence for conventional military operations.

(U) The reasoning in support of the new intelligence role held that field commanders must have intelligence regarding the strength, composition, and deployment of NVA and VC units to conduct successful operations against them. Since 5 SFGA is part of the US effort, it must expect to be called on to support the operations of US combat forces even at the expense of the advisory effort.

(U) Such reasoning is rational but irrelevant in two respects. It is the reasoning of the conventional warfare environment and ignores the fact that an insurgency, even in its most conventional phase, retains its unconventional character and that its strength and persistence lies in its viable infrastructure. Thus, although it is important to find and fix enemy units operating in a given area, it is equally important to continue to gather intelligence about the local political military underground apparatus that supports and controls these units. Unless this apparatus is rooted out and destroyed, in the villages and hamlets, the cost of military victory may be political defeat.

(U) (S) The 5 SFGA Quarterly Operational Report for the period ending 31 July 1967 states, "Production of tactical OB continues to receive priority. . . . Production of infrastructure intelligence is being upgraded but will, of necessity, remain the secondary effort at present."[18] The readjustment of mission priorities in response to the informational needs of US combat forces had led to the deemphasis of the unconventional side of the insurgency with a concomitant reduction of effort in collecting, evaluating, and disseminating intelligence required for dealing with the political dimension of the conflict.

INTELLIGENCE PROBLEMS: PRODUCT AND PROCESS

(U) It was observed at the beginning of this chapter that intelligence is both a product and a process. If so considered, the human and organizational problems that impinge on the intelligence mission of 5 SFGA may be viewed in balanced perspective.

Product

(U) Even a cursory reading of reports submitted by USASF detachments during the period 1964–1967 indicates how the shift in mission priorities profoundly influenced the type of intelligence collected and processed and reveals also (by its absence) the type of information that was not subsequently collected.

EFFECT OF EXTERNAL COMMAND RELATIONS

(U) The intelligence product also suffered because of organizational constraints that derived from the subordination of the USASF effort to the operational control of US commanders and the opportunity thus afforded them to utilize the assets of 5 SFGA in support of field forces operations. The arrival of US combat units in the RVN made this subordination both necessary and possible. From the standpoint of the successful prosecution of the war effort, the command arrangements were fully justified. Since the field force commanders are responsible for the security of their assigned areas, they need the authority to coordinate all the resources.

(U) ~~(S)~~ What is justifiable, however, is not always desirable. To accept the need for subordinating USASF units to the operational control of area commanders is not necessarily to accept the consequences of such a move for the intelligence process and, to the extent that process and product are interdependent, for the intelligence product. Similarly, to accept the validity of justifications incidental to the subordination is not to ignore the fact that such justifications reflect the organizational needs of field commanders engaged in supervising what was basically a conventional military response to a challenge that was and remained primarily unconventional and political in character. However much unity of command may have ensured unity of effort insofar as the intelligence collection, evaluation, and dissemination activities of 5 SFGA were concerned, the price for unity was an intelligence product that lacked balance and an intelligence process that perpetuated that imbalance.

(U) ~~(S)~~ The problem with the organizational arrangements supporting the intelligence mission of 5 SFGA was that they institutionalized a relation that ensured the predominance of a single consumer to the near exclusion of all others. That there is a need for border and denied-area patrols, a RECONDO school, and Greek-letter units cannot be denied, and the performance record in these fields was an enviable one—so enviable that it led to a demand for their expansion. It is in this connection that the organizational arrangements failed to provide an effective check against the excessive demands of US commanders for the use of the assets.

(U) ~~(S)~~ The question is not whether USASF units can perform combat intelligence support services but whether, in terms of the cost to the CIDG program, they should be so heavily committed. With the notable exception of IV CTZ, where the problem has not yet arisen, the growing involvement of USASF units in combat intelligence support activities required personnel who would normally function in an advisory capacity in area development activities to be diverted to the collection of combat intelligence.

(U) ~~(S)~~ To the degree that organizational arrangements contributed to an emphasis on combat intelligence and the neglect of internal defense intelligence, they must be regarded as defective. As long as such arrangements obtain, neither augmentation nor improvements in the implementation of the intelligence cycle will remedy the situation. On the contrary, the existing imbalance will likely be made even more pronounced. In future internal defense situations similar to Vietnam, it should be expected that as the need for combat intelligence intensifies so will the pressures to utilize Special Forces resources to meet it.

(U) The order of battle of NVA and VC units can be confirmed through intelligence gathered by patrols and other conventional means. Because of the nature of communist insurgent warfare, however, order-of-battle data and information on enemy plans can also be collected covertly through informant nets and from within the infrastructure that controls and directs enemy unit operations. Although such methods are more difficult to employ, there is reason to believe that the yield may be greater in this type of conflict. The important point is that the methods of collecting internal defense intelligence characteristic of Type II low-intensity conflict can yield both the combat intelligence needed by conventional forces in Type I low-intensity conflict and the vital data on the enemy's infrastructure.

Process

(U) In analyzing the shift in mission priorities and the changed character of the intelligence product it is essential to consider the various problems that have developed since 1964 with respect to the implementation of the intelligence mission by 5 SFGA.

(U) Personnel. The successful implementation of any mission is largely a function of the number and quality of the personnel involved. In the intelligence field the human factor assumes a special importance. Individual initiative and personal judgment exert a considerable influence on what information is collected and how it is analyzed. Objectivity, experience, and training become more critical at each succeeding stage of the process. As data are refined and as reporting gives way to interpretation, the dependence of the analyst on the judgment and the objectivity of subordinate echelons increases.

(U) The personnel problem can be reduced to the basic deficiencies of insufficient numbers and inadequate training. Since the shortage of USASF personnel overall in 1967 was related to the growing involvement of 5 SFGA in a variety of support activities, the obvious solution would have been to terminate some of those activities and return USASF personnel to duties more in keeping with the CIDG program. However, too many factors then operated to prevent a return to the situation that existed before 1965. These same factors fostered the adoption of an alternative solution, i.e., the use of non-USASF augmentation personnel highly trained in combat intelligence.

(U) ~~(S)~~ This augmentation enabled 5 SFGA to professionalize its intelligence effort and to provide an intelligence product adequate to the needs of conventional US units in the RVN. It nonetheless contributed little to the requirement to collect, evaluate, and disseminate intelligence on the insurgent infrastructure. One of the known characteristics of the conventionally trained US intelligence officer is a deep distrust of any report from illiterate indigenous sources, yet in this type of insurgency the people are the prime source. The crux of the problem is one of the availability of personnel who by training and experience are capable of gathering both combat and internal defense intelligence.

(U) In the final analysis the only permanent solution is a fundamental reorientation of US Army intelligence training. More courses in the collection and evaluation of internal defense intelligence in Army training programs and intelligence schools would ameliorate many existing problems and would afford Special Forces officers and enlisted men opportunities to develop their capabilities beyond the level they can achieve through the limited internal defense intelligence training they receive as part of their general training in special warfare.

and operational support needed by US conventional forces when they are committed, provision should also be made to ensure that Special Forces will possess an undiminished capability to meet its internal defense intelligence needs in support of its own mission.

(U) (c) Such a reassessment may reveal desirable alterations in organization and preparation to perform the intelligence function. To date there has been too much emphasis on instructing officers and enlisted men in the collection and evaluation of combat intelligence and too little on the techniques of gathering and processing internal defense intelligence.

(U) (d) Intelligence augmentation was appropriate only to increase the combat intelligence capability to meet the requirements of the field forces. The need for intelligence specialists capable of gathering and processing internal defense intelligence was ignored. The subordination of USASF detachments to the operational control of US field force commanders should be reexamined with a view to resolving the problems created by allowing these commanders unlimited access to USASF resources.

(U) The problem of allocation of USASF resources is less one of emphasis than of definition; that is to say, there remains a need to reconcile the demands of the area development aspect of the CIDG program with the requirements established by MACV for supporting US combat operations. Given the limited USASF resources, the question arises whether these resources have been put to their optimum use. Admittedly the answer to this question involves considerations that transcend the intelligence mission per se. Such considerations pertain to the role of USASF detachments in a Phase II insurgency (or Type I low-intensity conflict) dominated by the presence of conventional US military forces.

A New Role?

(U) Here the experience of the years 1964–1967 poses another question. Has another role developed for USASF that should be recognized in doctrine—the role of organizing, training, and leading indigenous personnel to collect intelligence for US combat forces when they are committed in Type I low-intensity conflict in an underdeveloped country? The USASF mission in the RVN as originally conceived made no provision for the use of USASF in support of conventional US combat operations. The fact that they have been subsequently involved raises the danger that the definition of mission responsibilities for future commitments will be predicated too firmly on the expectation that the same operational patterns shown by events in Vietnam will occur in other areas where Special Forces become involved. The danger is one of overcompensation in response to an experience that may ultimately turn out to have been unique. If, however, a Special Forces group should be deployed elsewhere in a Type II low-intensity conflict environment that rises to Type I, it is fairly safe to predict that it will be assigned an expanded intelligence mission—to provide combat intelligence for US combat forces—and that to carry out the expanded missions the group will require professionally qualified military intelligence augmentation.

MATERIEL

(U) Since the US counterinsurgency effort really got under way in Vietnam early in 1962 much research and development has been devoted to electronic devices and "black boxes" to improve battlefield surveillance, target acquisition, and night security intelligence collection. Such devices are aids to the production of combat intelligence but have little application to internal defense intelligence.

(U) ~~(S)~~ So long as the intelligence mission of 5 SFGA continues to reflect the emphasis on combat intelligence, detachments will probably continue to receive quantities of new and better equipment that assists in collecting and analyzing information regarding the location, size, and composition of NVA and VC units but is of little help in acquiring intelligence concerning the organization and activities of the infrastructure and the local guerrillas who provide the regular units with food, medicines, intelligence, porters, and other support. The best radio direction-finding equipment and test kits designed to detect the presence of human waste in streams are of no use in determining the identity of VC cadres or the loyalty of villagers. Cameras capable of high-resolution photography and field photo-interpretation laboratories equipped with the latest devices for processing and analyzing films of a particular region have little application to the problem of identifying the membership and internal operation of a covert administrative network. The bulk of the new intelligence materiel is appropriate only to the combat intelligence mission. Men must be trained and detailed to use it, and the imbalance between the combat and the internal defense efforts of 5 SFGA is thereby perpetuated.

IMPLICATIONS

(U) The experience of the period 1964–1967 shows that the intelligence mission of 5 SFGA underwent a gradual transformation. The implications for the future are significant.

Priorities and Allocation of Resources

(U) ~~(S)~~ There is an apparent need to reexamine the mission priorities of the 5 SFGA as they bear on the type of information collected and the allocation of USASF resources. With regard to the former, experience since 1965 suggests that 5 SFGA was required to emphasize collection of combat intelligence on NVA and VC Main Force units and was thereby diverted from the internal defense intelligence effort. Recently published field manuals reflect a growing awareness at DA level of the need for a balanced collection effort, and by mid-1967 those who established mission priorities in Vietnam appeared to show more recognition of the need for restoring a proper emphasis to internal defense intelligence.

(U) The concept of internal defense intelligence, involving as it does a mix of police and the political apparatus, needs to be explored in depth. Such a reassessment should determine just how the roles of USASF in Phases I and III insurgency (and Type II and Type I low-intensity conflict) differ. Thus, although provision should be made for USASF to provide the combat intelligence

longhouses. It was essentially a temporary denial program based on a quick and necessarily shallow effort to win the hearts and minds of the villagers to stunt the growth of the VC popular base. Its success was real but evanescent; it was to falter after being turned over to GVN control because there was no continuing GVN program to exploit initial success. The GVN was unwilling or unable at the time to satisfy the grievances of the Hill Tribes.[2]

Area Development

(U) ~~(S)~~ Meanwhile the US mission had been supporting GVN programs with other irregular ethnic and religious minority groups. More US Army Special Forces (USASF) detachments were brought into the country and paired with counterpart Vietnamese Special Forces (VNSF) detachments. Expanding operations were spotted at isolated sites throughout the country in conformance with the "area development concept," as it was then called. In essence, this was still the CIDG camp mission of 1967. The program shifted in 1962 from a mutually supporting people's program, to help the villagers defend themselves over a relatively large area, to an airhead fixed-garrison concept that gave priority to security and sustained effort with fortified camps and relatively small assigned tactical areas of operational responsibility (TAORs) in remote or insecure populated districts over which the GVN could exercise little or no control.

Border Surveillance

(U) ~~(C)~~ During the SWITCHBACK (FY63) period of transfer to MACV of responsibility for the CIDG program, increasing emphasis was placed on border surveillance. The trend was to close out camps in the interior and to move to new sites near the border. In the third quarter of 1963 the border-surveillance mission became paramount, and by 1 July 1964 there were 18 camps operational or under construction along the border, some of them in unpopulated areas with no opportunity for area development. Border-surveillance operations were not effective for two reasons: (a) the camps were too far apart, averaging 28 miles, and (b) the CIDG platoon and squad leaders were not up to patrolling independently.

(U) It was typical for a new border-surveillance camp to experience frequent contacts and inflict casualties on the VC for a few weeks, after which such activity virtually ceased. The VC cleverly avoided contact in border as well as interior areas in which they had no immediate operational interest. Their purpose was served if their Main Force units, groups of replacements, and resupply columns could cross such areas undetected. There was no interlocking lateral patrol pattern between border-surveillance camps. Each was authorized four companies. Two were supposed to be on the border at all times, operating from forward bases in a wide linear deployment that subdivided the company into platoons, sections, and five-man reconnaissance teams, but the arrangement did not work very well in practice. It is doubtful that negative intelligence reported by CIDG patrols was of much value. Eighteen border sites, with a total of 63 strike force companies assigned, gave a density of one company to 28 miles of border, or, in terms of continuous patrolling on a 24-hr basis, one platoon to 28 miles. This constituted only a minor presence on the border.

Chapter 7

CIVILIAN IRREGULAR DEFENSE GROUPS COMBAT OPERATIONS

(U) Before describing Civilian Irregular Defense Groups (CIDG) operations during the period of this study, it may be useful to recall their initial pattern and trend from their beginning late in 1961. The nature of CIDG operations has frequently altered during 5 years in response to shifting constraints, mission emphasis, and the demands of the US buildup.

BEFORE 1 OCTOBER 1964

(U) ~~(S)~~ US Special Forces involvement in the CIDG program began late in 1961 in Darlac Province. The town of Ban Me Thuot, the capital of the province and the location of HQ 23 ARVN Div was gradually becoming isolated by growing VC domination of the surrounding countryside. This is Rhade country. The Montagnards did not possess firearms and it was not difficult for VC agents, combining persuasion with pressure, to build on the Montagnard's existing discontent and distrust of the Government of Vietnam (GVN). The US and RVN governments believed there was a good chance of reversing this deteriorating situation by preempting Montagnard support with a positive appeal backed up by an offer to arm the tribesmen provided they declared for the GVN.

(U) ~~(S)~~ In October 1961 the pilot project was initiated in the village of Buon Enao and by April 1962 the program had spread to 40 nearby villages. The concept of operations was simple. The Montagnards had to agree to refuse access to the VC and if necessary to defend their villages. The symbol of this agreement was the erection of a fence around the village. USASF detachments and their counterparts trained village defenders and small mobile strike forces to reinforce threatened communities at need. By August 1962 the program extended to 200 villages. In retrospect it appears that the keys to success were in providing firearms to primitive people who greatly prized them and in reviving the medical-aid and education programs that the GVN had discontinued.

(U) ~~(S)~~ Combat operations were of little significance. There were no fixed defended camps. Special Forces teams moved frequently and lived in native

intelligence collection and the planning of counterguerrilla operations of all paramilitary forces in these sectors and subsectors. Increased effectiveness was most marked in III and IV Corps Tactical Zones (CTZs) in provinces where a B detachment advised the sector commander and controlled the subsector advisers as well as the CIDG camps. Joint operations employing RF/PF and camp strike forces were more easily planned and carried out.

AFTER MID-1965: IMPACT OF US BUILDUP

Mobile Reserves

(U) A number of innate weaknesses that grew out of attempting too much in mission assignment with inferior assets and counterpart detachments have already been mentioned, but there were others that might be termed organizational. A weakness of the CIDG program that persisted until the buildup of US combat forces was well under way was the lack of adequate mobile reserves in each CTZ and a lack of available airlift to commit them promptly if they had existed. The fixed pattern of isolated non-mutually supporting CIDG camps invited attack in the form of a night raid in strength that could overrun a camp, take possession for a few hours, and withdraw at dawn. The realization that this capability of the enemy applied to almost any camp, if the enemy chose to allocate sufficient forces, was not a good morale factor.

(U) Inability to reinforce a threatened camp was only one aspect. Camp strike force operations also suffered because the reaction capability was inadequate to exploit a promising contact. The US buildup ensured an adequate rotary-wing lift, making it feasible to expand the meager Mobile Strike (MIKE) Forces during 1966. It also became easier to assemble a CIDG task force composed of companies from two or more camps. The potential of US ground forces for providing reaction forces was realized when the field force commanders specified that US divisions and separate brigades must designate reaction forces that would be available to exploit CIDG contacts developed within their assigned areas of operation. The presence of US forces similarly lent realism to the war-zones penetration mission.

(U) Another factor made for more effective camp strike force operations within the broader context of improved strike force leadership and increasing VNSF competence resulting from better formal training. This was the authorization for a Combat Reconnaissance Platoon (CRP), and later two, for each CIDG camp. It took many months to complete their organization and training. The personnel of these units were specially selected. They received special training at Dong Ba Thin in reconnaissance techniques and became the elite unit of each camp. At first a CRP was seldom employed as a unit but instead added its special skills to each company patrol by the attachment of a CRP squad.

(U) One training deficiency that was characteristic of the earlier period persisted, however. There was almost no small-unit tactical training in the CIDG camps. Strike force companies, after receiving their initial formal training and becoming operational, received little refresher training. It is a mistake to assume that squads and platoons will increase in battle efficiency through

RAC

(U) Many US commanders, unfamiliar with the special aptitudes and failings of irregulars, at first equated the operational capabilities of a strike force company with those of a regular infantry company. Missions were assigned strike force companies for which they were unsuited. US commanders often wished to use one platoon on an independent mission, attach another to a US company, etc—not realizing the necessity for preserving company integrity. Such difficulties gradually disappeared as subordinate US commanders grew more familiar with the irregular asset, command relations were explained, and the group and letter-company headquarters indoctrinated US officers with the nature of the irregular and his capabilities.

(S) By spring 1967 CIDG operations in II and III CTZs were dominated by the intelligence and operational requirements of the two field forces. The Quarterly Command Report for the last quarter of CY66[40] clearly reflects the auxiliary role of 5 SFGA.

> During the last three months CIDG forces were credited with killing 1302 VC as compared with 817 for the previous reporting period. Particularly noteworthy was the contribution of the CIDG units in joint operations with other Free World Military Assistance Forces. The missions given to CIDG units include reconnaissance, search and destroy, flank security, blocking force, reaction force, road and convoy security, and special missions. In all such operations CIDG forces have proven to be a potent, flexible supplement to conventional units. [Ref 20, p1]

In I CTZ this was much less so during the period under review, at least until Task Force Oregon was committed in May 1967, because III Marine Amphibious Force (MAF) operations were concentrated near the coast. In IV CTZ the US buildup did not impact operationally, although its beneficial effects were felt, e.g., more helicopter and tactical air support. In IV CTZ, and to some extent in I CTZ, the full range of the USASF/VNSF/CIDG counterinsurgency effort, though improved and intensified, was directed much as it had been before the US buildup. CIDG operations were not diverted from their primary targets—the local guerrillas and the VC political substructure—to meet the intelligence and operational requirements of conventional forces whose targets were North Vietnamese Army (NVA) and VC Main Force units.

(U) Sitting Duck and Bird Dog. The US troop presence introduced a strong potential reaction capability hitherto lacking in the larger combat environment of Vietnam in which the CIDG camps were but small isolated strongpoints without any inherent capability for mutual support. The organic MIKE reaction forces did not until late in 1966 attain significant strength. ARVN reaction forces were usually available but could seldom be quickly committed. Actually, until the US infantry arrived in strength no adequate reaction capability existed to exploit a target of opportunity (e.g., a multibattalion VC concentration preparing to attack a Special Forces camp) or to justify penetration of the war zones by CIDG reconnaissance patrols to locate enemy units. Subsequently, many, if not most, of the more productive US operations in II and III CTZs began as reactions to USASF/CIDG contacts, both enemy- and friendly-initiated, or to developing enemy concentrations preparatory to an attack that USASF/VNSF intelligence had discovered and reported.

5 SFGA OPERATIONS BEFORE THE US BUILDUP

(U) The 5 SFGA suffered some loss of momentum at the outset because of the Montagnard revolt in September 1964. This, combined with heavy rains in the highland areas, severely restricted offensive operations for the last quarter of 1964. Until mid-1965, despite the assignment of additional missions, the pattern of CIDG operations remained essentially the same as that described in the previous study. Patrols were generally of the area search-and-destroy type and of company size and were carried out during daylight. The target was the local VC guerrillas and the infrastructure.

Sequence of Area Development

(U) The commander, COL John B. Spears, emphasized area development. Conferences with MACV 43 resulted in the issuance of detailed instructions by HQ 5 SFGA that [illegible] role of the A detachment in line with the pacification phases of the GVN:

> Approach [illegible] area.
> Clearing operations [illegible] establish sufficient security to free the area from VC [illegible] control.
> Securing operations [illegible] GVN control, or in the case of many Montagnard areas [illegible].
> Development, primarily [illegible] consolidation, reconstruction, and rehabilitation. The detachment became [illegible].
> Civilian phase: the A detachment departed as the GVN assumed complete responsibility.

New Missions

(U) (C) This sequence was compatible with a new role that Military Assistance Command, Vietnam (MACV) was considering, and had assigned to two A detachments as a test in the last quarter of CY64, the assignment of a second coequal mission to A and B detachment commanders—to advise subsector and sector commanders in lieu of MACV advisers in situations where detachments were located in or near insecure district and province capitals. Two more missions were unrealistically assigned at this time: (a) operations against VC war zones and secret bases, and (b) interdiction of VC north-south infiltration routes.

(U) (C) The state of training and the quality of small-unit leadership in the CIDG strike forces in the autumn of 1964 were simply not up to these missions. It was unrealistic to expect irregular light-infantry companies with few competent platoon commanders or squad leaders to operate in hostile areas into which Army of the Republic of Vietnam (ARVN) units would not venture. The second mission served to counteract the general trend toward the border, where more camps were needed to close the gaps, and thus spread camp strike forces too thin to carry out either mission effectively.

(U) (C) Project Delta became operational during the last quarter of 1964 and demonstrated a capability for small-team reconnaissance penetrations of the war zones backed up by reaction forces to exploit favorable opportunities. But Project Delta, although USASF-advised, was not then a part of the CIDG program.

(U) Sector Subsector. In the spring of 1965 the coequal sector and subsector missions offered the detachments so assigned the opportunity to coordinate

battle experience. They must be constantly retrained, especially in fire discipline and fire and movement exercises. This is an accepted principle in the best Western armies, and it is presumptive that irregulars require constant unit refresher training between operations.

(U) ~~(C)~~ General Effects of the US Buildup. The first mention in the quarterly command reports of the effect of the increasing US combat presence appears in the one submitted by COL W. A. McKean for the third quarter of 1965.[5] The body of the report states:

> Certain changes in the war effort, brought about in part by the large influx of US combat forces, broadened the spectrum of employment of USASF/VNSF and allied CIDG assets. New mission tasks have been defined in response to the requirements for assisting the introduction of US forces into remote areas. [Ref 5, p 2]

(U) ~~(C)~~ The report listed as helpful the increased engineer and helicopter support and the added security and reaction-force potential provided by US troops near CIDG camps, but there were also drawbacks. The high priority given US forces in the allocation of aircraft for logistical support resulted in delayed distribution of supplies to CIDG camps and of material and equipment required for new camp construction. For a time there was competition for 60-mm-mortar ammunition, but such problems were temporary and readily solvable. A thornier one involving command relations that kept recurring as US units continued to arrive and take the field has been addressed in Chap. 4.

Specific Effects and Difficulties

(U) When a US division or separate brigade was assigned an area of operations by one of the field force commands it invariably included all or a portion of the TAOR of a CIDG camp. Subordinate US commanders are quick to assume operational control of any assets they find in their assigned areas. Their misunderstanding of the nature of the CIDG program and the advisory role of USASF (the problem referred to in the preceding paragraph) led them to assume that they automatically had operational control of camp strike forces as well as the USASF A detachment. Since the former was under the command of the VNSF detachment, which came under the operational control of the Army of the Republic of Vietnam (ARVN) corp commander, certain extraordinary arrangements had to prevail before the US commander actually had what amounted to indirect operational control.

(U) An Auxiliary Role. What altered the CIDG operational pattern was simply the use that US unit commanders made of the USASF detachments and their irregular assets in intelligence collection and in their own operations. Western armies campaigning in strange lands historically have found it convenient to recruit native auxiliaries to perform many useful functions, among them acting as a cultural interface and information medium between the alien troops and the people. Arriving US combat forces taking the field for the first time in Vietnam found the USASF/VNSF/CIDG an existing asset that could at least partly fill the role. The best current intelligence within the geographical limits of its TAOR was obtainable at a CIDG camp.

(U) This method of operation, however, frankly stipulates that the night belongs to the enemy. In conventional operations a superior force can afford a posture of watchful inertia at night. What occurs outside its defensive perimeter does not greatly matter unless the enemy attempts a night assault; and against this contingency superior firepower is the shield. In Vietnam, however, there is another dimension to the war. The enemy is political and military and civilian and soldier, and he is everywhere. He emerges at night to take over control of the countryside outside the defensive perimeters. He is able to initiate hundreds of incidents and small actions nightly because he controls the people to the extent that those who do not cooperate with him will at least seldom inform against him; hence he can conceal himself among them during daylight. It is too great a self-imposed handicap to allow the enemy to move almost at will outside the wire and to react (except for camp night-security details) only with preplanned artillery concentrations when his presence is reported.

(U) ~~(C)~~ Change. Late in 1966 the commander, 5 SFGA, with the dictum that the night belongs to him who uses it, ordered that thenceforth all camp strike force patrols would clear camp after dark and return during darkness. This innovation was a sharp and welcome departure from previous practice. The substantial jump in enemy kills in the last quarter of 1966 (817 to 1302) was doubtless influenced by this change in tactics.

Responses

(U) Since mid-1965 the VNSF command steadily progressed in competence and organizational coherence. VNSF and CIDG formal training improved under USASF guidance as MIKE Force and CRP expansion increased reaction and reconnaissance capabilities. Together with the greater availability of helicopters and tactical air support and the reaction potential of US combat forces, these improvements unquestionably contributed to a continuing uptrend of CIDG operational effectiveness that was not quite maximized because a shortage of USASF personnel left so many A detachments understrength.

(U) Patrol Size. The company remained the normal TAOR patrol element except in I CTZ where early in 1967 the Marine commander established definite criteria for CIDG patrols. Their primary purpose was reconnaissance; they were to avoid contact except in the most favorable circumstances within their own capabilities; their strength was to be between 25 and 50.

(U) These patrols operated for several days, proceeding as much as practicable along ridge lines. They would halt for a few hours to send small parties down into the valleys to check the trails and to enable CRP personnel to covertly observe hamlets before entering to question the inhabitants. Guerrilla bands or agitprop groups whose presence would not have been discovered by an open approach down the trail were sometimes discovered with these techniques, and of course the VC trail watchers were unaware of the patrol on the ridge. Three platoon patrols were kept continuously operating in the I CTZ TAORs.

(U) USASF were not entirely happy with this patrol plan for two reasons: (a) before its implementation they had been quite successful with larger combat patrols and (b) they felt that the Marine command, which thought in terms of artillery and tactical air reaction, did not back up this patrol plan with a reaction-force commitment adequate to exploit it properly.

(U) Nevertheless it does appear that a continuous three-patrol reconnaissance operation in the TAORs (assuming a strike force of three companies) is now a practical concept in the premises that CIDG operations are auxiliary to and in support of US combat operations primarily in the related areas of intelligence collection and finding the enemy for reaction-force commitment.

(U) The Delta. During the dry season, night operations are more feasible in IV CTZ than in other CTZs. CIDG operations in the Delta, little influenced by US combat forces, were enhanced in provinces such as Chau Doc, Kien Phong, and Kien Tuong where B detachment commanders were assigned the coequal sector advisory mission and thus could coordinate the intelligence collection and operations of all paramilitary components against local guerrillas and infrastructure. In this combat environment there was no auxiliary role. The USASF VNSF CIDG effort was improved but essentially unchanged. Although the main US ARVN effort lay to the north, USASF-advised strike forces probably attained a greater degree of effectiveness in the Delta in line with the aims of the CIDG program before the US buildup than anywhere else.

(U) There are many waterways and few roads in the Delta. In the dry season, movement on foot cross-country is practical except for the natural obstacles of streams and canals. During the wet season, movement on the surface is restricted to boats or walking single file along riverbanks and canals. Small craft can move about freely in vast areas that have become lakes.

(U) The flat open terrain is much easier for troops to traverse in the dry season than the forested sharp ridges and deep valleys so characteristic of other CTZs. The flatness is also conducive to night operations. Hamlets can be distinguished from a distance on a dark night by the dim light that often burns in a peasant's hut or on a starry night by the silhouette of the structures. This facilitates the stealthy approach of a patrol to make a surprise search in the small hours.

(U) During the rainy season the newest technology of boats was exploited. The assault boat has been used for some years and more recently converted into an airboat, but the most telling innovation was the US Navy's PACV, first used during the 1966 rainy season. At the height of the rainy season these high-speed craft can move freely over terrain that becomes firm and dry 2 months after the rains cease. The enemy is the local guerrilla who controls many of the hamlets although he cannot prevent friendly troops from entering them. The CIDG are engaged in ferreting him out and killing him. Contacts for the most part are with relatively small groups of VC, but they are frequent and well exploited by the rapid commitment of MIKE Force elements. This suggests that the three-reconnaissance-patrol plan, in place of a single company-sized combat patrol, might become feasible in the dry season for IV CTZ. Some patrols must take the field unaccompanied by US advisers. This had to be accepted in I CTZ. It is surely becoming increasingly feasible as evidenced by the turnover of CIDG camps to VNSF detachments.

EXAMPLES AND STATISTICS.

(U) Thousands of CIDG operations took place during the period under review. Only a few examples can be given here. These, together with some operational statistics of the second quarter of CY67, do, however, offer a fair idea of the scope and character of CIDG operations.

It was not worth it, apparently, on the basis of what could be expected in the way of mission accomplishment against the threat and the demonstrated enemy capability to overrun it.

(U) A Shau illustrates a weakness in the border-surveillance concept. The border-surveillance camps are too few and too far apart. They have never been able to interfere much with enemy tactical or supply movements across the border, and where a camp has succeeded well enough in its mission to be a real nuisance (e.g., Dak To) the enemy can destroy it unless major field forces can be deployed to defend it. This observation is based solely on the apparent lack of success of these camps in exercising any real measure of control over cross-border movement. Their existence, however, can be justified from the aspect of surveillance, intelligence collection, and, where located in populated areas, area development.

Statistics

(U) The haste that characterizes the preparation and reproduction of operational reports inevitably involves error, chiefly discernible in figures that vary in different or successive reports on the same subject or incident. Operational reports of the 5 SFGA are no exception, but the purpose of presenting these statistics is only to give the reader some idea of the scope of CIDG operations.

(U) Table 3[18] gives overall operational statistics, by CTZ, for the last 90-day period of this study. There are too many variables—known, obscure, and unidentifiable—that bear unevenly from CTZ to CTZ to permit any conclusions from comparisons between one CTZ and another. Enemy-initiated contacts have been omitted as having little bearing on CIDG operations. The one observation that appears sound is that the overall incidence of contacts per operation or the average number of operations to generate one contact reflect a great deal of area-search patrolling ("long walks" to the troops) undertaken in the absence of hard intelligence on enemy movement and locations.

(U) Another doubtful aspect of operational reporting is the extent to which subordinate detachments follow or interpret as intended the criteria prescribed by higher headquarters for the reporting of their operations. An inexplicable disparity between I and II CTZs in company-sized and larger operations per camp per week affords a good example (see Table 4, based on Table 3).

(U) ~~(C)~~ Even allowing for an extraordinary MIKE Force commitment in II CTZ it is difficult to account for nine company-sized or larger operations per camp per week unless there was some drastic difference in what Co C at Danang and Co B at Pleiku considered a company operation. There appears to be, however, a relation between MIKE Force strength and the number of operations per camp, as shown in Table 5.

(U) Table 6 reflects combat efficiency, by CTZ, as a function of CIDG and VC killed in action (KIA) per contact. Both friendly- and enemy-initiated contacts are used in relation to casualty statistics. It should be noted that contacts, even the friendly-initiated category, are as much a function of VC presence and aggressiveness in a TAOR or strip of border as of the intensity, pattern, and skill of CIDG patrolling. A very satisfactory kill ratio is reflected, but the low ratio of VC KIA per contact implies many contacts that did not develop into significant combat.

Camp Duc Co, II Corps Tactical Zone

(U) ~~(C)~~ On 30 June 1965 the VC attacked Duc Co, a camp in Pleiku Province near the Cambodian border just south of Route 19. The attack began with a mortar barrage supplemented by small-arms fire and continued until 17 August. This siege was raised when an ARVN task force of eight battalions made contact with the defenders. Two battalions of the 173d Abn Bde were deployed to II Corps as a reserve for the operation. This was the first time that a relatively strong US combat force had been tactically deployed for a possible reaction mission developing from an attack on a CIDG camp.

Plei Me, II Corps Tactical Zone

(U) ~~(C)~~ On the evening of 19 October 1965 the CIDG camp at Plei Me, 50 km south of Pleiku, was attacked with complete surprise by elements of the 32d, 33d, and 66th NVA regiments. At the time one CIDG company with two USASF advisers was operating 15 miles northwest of the camp, and five local security patrols were outside the wire. There were also two 20-man outposts, 2 km south and 1 km northeast of the camp.

(U) ~~(C)~~ The camp received small-arms, mortar, and recoilless-rifle fire until 0300 20 October, when the first assault was launched. Although the attackers got within the defensive wire on three sides, the camp held out, assisted by a flareship and air strikes. The USASF and VNSF detachment commanders both requested reinforcements on the morning of the 20th. None were immediately available in II CTZ, but the commander 5 SFGA arranged for the use of two airborne ranger companies of the Project Delta reaction force in Binh Dinh Province. They were brought in by helicopter during the forenoon of 21 October to a landing zone 6 km north of the camp. They closed without incident but had unaccountably taken 23 hr to do so. The company patrol had returned without serious contact the evening of the 21st. The commander II Corps also dispatched a small mechanized relief column that cleared Pleiku on the morning of the 21st. It was ambushed twice but finally reached the camp on the evening of the 25th after the action was over. There seem to have been no more assaults after the first night, but the enemy remained entrenched on the high ground and continued to fire sporadically on the camp. The initiative passed to the defenders with the arrival of the airborne ranger companies. On the afternoon of the 22d a three-company force sallied forth to clear the high ground and met strong resistance. Similar operations on a smaller scale continued on succeeding days. A final such effort launched in strength at 0930 25 October to clear the slope north of the camp met with stiff resistance and failed, but this contact was the last. The enemy withdrew and contact was lost.

A Shau, I Corps Tactical Zone

(U) ~~(C)~~ A Shau was an isolated camp southwest of Hue, about 5 miles from the Laotian border. Its mission was border surveillance and the interdiction of infiltration routes. During the first week in March 1966, captured enemy documents and defectors indicated that an attack by four NVA battalions was imminent. Reinforcements were requested. HQ I CTZ disapproved the request, but commander 5 SFGA committed a MIKE Force company of 143 men with seven

OPERATIONAL PROBLEMS AND RESPONSES

CIDG Pattern

(U) (C) CIDG patrol operations unaugmented have probably never attained saturation intensity in any camp TAOR or stretch of border. With unfriendly eyes and ears in the adjacent hamlets to inform the local VC when a patrol cleared camp during daylight and the direction it took, it was not difficult for small guerrilla forces to avoid contact in an area of 200 or 300 sq km. Only one patrol of company size could usually be maintained continuously off site. Three coordinated platoon patrols would be much more than three times as effective in making contacts, but there were reasons for the company-sized patrol.

(U) (C) Platoon leaders formerly were uniformly mediocre and not up to operating on their own. The company was the unit, its only real leader the company commander. Some VNSF officers favored the company-sized patrol for reasons of safety, and with some justice. It was less apt to be seriously attacked or to make contact as it went clattering down the roads and trails during daylight, its progress reported as it proceeded, so that any enemy force present in the area had the extreme options of engaging from hasty ambush or discreetly disappearing into the jungle as well as a number of intermediate variations. Perhaps the best reason for the company patrol is that it required only two USASF advisers. Three separate simultaneous patrols would have required six—a requirement impossible to sustain regularly. The purpose of the patrol is decisive provided that other considerations, such as the quality of platoon leaders, are not critical. If the mission is search and destroy, the company size is almost mandatory. If the mission is reconnaissance and intended generally to avoid contact except in combination with a reaction force called in on a target of opportunity, then two or three smaller units operating simultaneously are feasible from the aspect of security and are potentially more than three times as productive in gathering intelligence and spotting reaction-force targets.

(U) (C) If a company patrol made contact it was usually because small groups of the enemy chose to harass it, or the enemy was present in unsuspected strength and could attack. Patrol routes and patterns were altered. If this was not done patrols were apt to run into a prepared ambush, and this has occurred. If one corner of the TAOR had been neglected for a month, the next patrol might be directed to pass through it more or less on a hunch. Occasionally an operation could be planned on before-the-fact intelligence with some hope of surprising an enemy force, but not often. Most patrols were simply sent out to patrol an area and inquire of unresponsive villagers whether they had seen any VC.

Night Operations

(U) (C) Doctrine and Practice. Although US doctrine for decades has emphasized the value of night operations and this has been faithfully reflected in peacetime training directives, in wartime US forces in the field have tended to rely on their superior firepower and to opt for the tactical defensive at sundown. The find-a-hole-and-shoot-at-anything-that-moves night routine is a sensible approach to conventional operations by forces that can optimize their superiority in firepower offensively during daylight and be adequately protected by it during the hours of darkness.

UNCLASSIFIED

(U) ~~(C)~~

TABLE 4

Disparity between I and II CTZs in Company-Sized and Larger Operations per Camp per Week, 1 May–31 July 1967

CTZ	Camps	Company-sized and larger operations	Operations per camp per week
I	9	148	1.25
II	26	1053	9

(U) ~~(C)~~

TABLE 5

Relation between MIKE Force Strength and Number of Operations per Camp per Week, 1 May–31 July 1967

CTZ	Company-sized and larger operations per camp per week	Relative MIKE Force strength[a]	
		Men	Weighted value
I	1.25	570	1
II	9	2567	4.5
III	5.4	1855	3.25
IV	3.5	741	1.3

[a]Includes projects Sigma and Omega.

(U) ~~(C)~~

TABLE 6

Combat Efficiency as a Function of KIA per Contact

(Using both enemy- and friendly-initiated contacts.)

CTZ	Contacts	VC		CIDG		Combat efficiency[a]
		KIA	Ratio of contacts to KIA	KIA	Ratio of contacts to KIA	
I	231	319	1.19	86	0.33	1.12
II	472	473	1.0	101	0.22	0.98
III	377	711	1.97	103	0.27	1.69
IV	344	378	1.10	143	0.42	0.68
Total	1427	1931	1.35	436	0.31	1.05

[a]Ratio of contacts to VC KIA – CIDG KIA.

RAC

UNCLASSIFIED

USASF, which arrived on 7 March. The garrison consisted of 220 CIDG, 10 USASF, 6 VNSF, several interpreters, and 41 civilians.

(U) ~~(C)~~ Sequence of Events. Although local patrols and night ambush parties had failed to make contact on 7 and 8 March, the enemy began to probe the outer defenses at 1930 on the 8th. Early on 9 March the enemy opened up with 81-mm mortars, causing 57 casualties and damaging buildings. Air strikes were ineffective owing to heavy ground fog. An incoming C-47 crashed after being hit by ground fire. One helicopter evacuated 26 wounded.

(U) ~~(C)~~ Mortar and 57-mm recoilless-rifle fire beginning at 0400 10 March reduced most of the remaining buildings to rubble and silen[illegible] [illegible]lf the crew-served weapons. At 0500, heavy assaults were launched ac[illegible] e runway against the east wall and, under cover of the tall grass that [illegible]een allowed to grow in the minefields, against the south wall. The defense of the southeast corner collapsed and the fighting surged into the camp. Survivors from the east-wall and south-wall defenses withdrew to positions near the communications bunker and the north wall at about 0830. Air strikes were then brought in with good effect on the overrun defenses and on enemy units forming east of the airstrip for another assault.

(U) ~~(C)~~ The situation had deteriorated to a point where there was no possibility of restoring it with the means at hand. At 1500 HQ III MAF [illegible]spatched 16 H-34 helicopters with tactical air support to evacuate the garrison. At 1720 movement began toward the landing zone with surviving USASF and MIKE Force personnel fighting a rearguard action. Heavy fire at the pickup point inflicted many casualties, and the waiting CIDG panicked and tried to force their way into the aircraft. Two helicopters were destroyed by enemy fire. Some were unable to touch down because of the low ceiling. Only 65 persons were evacuated.

(U) ~~(C)~~ By 1745 all who remained and could do so (7 USASF, 40 MIKE Force, 50 CIDG, and the two downed Marine helicopter crews) resorted to evasion and escape action, moving northeasterly. On 11 and 12 March several small groups were sighted by rescue aircraft and picked up. Further air search 13-15 March failed to locate any more survivors.

(U) ~~(C)~~ Casualties. There was no information on enemy casualties. Friendly casualties are shown in the accompanying tabulation.

	CIDG	MIKE Force	Civilians	USASF	VNSF	Interpreters	Total[a]
Originally in camp	220	143	51	17	6	7	434
Returned	109	53	6	12	5	1	186
Returned, WIA[b]	52	33	2	12	1	1	(101)
MIA[b]	101	90	45	5	1	6	248
MIA, believed KIA[b]	40	75	45	5	1	6	(172)

[a]Enclosure 15, Sec II, Ref 21.
[b]WIA, wounded in action; MIA, missing in action; KIA, killed in action.

(U) Comment. The loss of A Shau and the severe casualties suffered suggest asking, in the wisdom of hindsight, whether it would not have been better to abandon the place without a fight in the face of the known odds (4 NVA battalions vs 17 USASF, a small VNSF detachment, and a garrison of some 350 irregulars). The decision not to rebuild and regarrison A Shau is significant.

Requirements

(U) ~~(S)~~ The concept required additional personnel—USASF, VNSF, and CIDG—and support. Four Mobile Guerrilla Force (MGF) companies and four additional CRPs would require 736 men. Four more A detachments would be needed. Support for these and other additional units, including camp strike forces, MIKE Forces, and long-range reconnaissance forces in each CTZ were estimated to require an increase of $12.6 million in the FY Parasol-Switchback budget.

Annual Planning Cycle

(U) The Annual Planning Cycle was the first product of what has become an annual comprehensive projection of the whole Special Forces effort in Vietnam, prepared and firmed about 6 months before the beginning of the calendar year. Broadly expressed, this planning process consists of answering the following questions: Where are we now? How did we get here? Where are we going? What do we need to get there? How do we proceed?

(U) ~~(S)~~ Planning guidance for the CY68 Concept was promulgated to the letter companies on 6 April 1967. Basically an extension of the CY67 Concept, it emphasized operations against the VC infrastructure and the establishment and maintenance of a posthostilities posture. It also envisaged a merger of four ARVN ranger battalions in I, II, and III CTZs and five in IV CTZ under the command of the VNSF C detachment commander to conduct border-surveillance operations and act as the corps reserve. The guidance informed the company commanders in considerable detail of group intentions in each CTZ, under the overall strategy of MACV, and requested comments and suggestions by 1 June 1967. The "Concept of Operations for Use of 5th Special Forces Group (Airborne) to Achieve Overall Objectives Through CY68"[18] was forwarded to COMUSMACV on 29 July 1967.

SUMMARY COMMENT

(U) CIDG combat operations from the organization of 5 SFGA on 1 October 1964 until the US combat presence began to impact forcibly by the third quarter of CY65 were much as they had been during the period of the earlier RAC study. The assumption of the coequal sector/subsector mission be several B detachments and some 30 A detachments in the second quarter of 1965 did not appreciably change the old operational pattern, although more coordination of the activities of all paramilitary components was thereby achieved.

(U) With the arrival of US combat forces the camp strike forces in II and III CTZs came more and more under the operational control of the commanders of US units. Under such control it was natural that the strike forces, both camp and mobile, were used primarily to meet US combat intelligence needs and tasked to carry out minor operations ancillary to the main conventional effort. At the same time the US buildup clearly stimulated the continued expansion of 5 SFGA—especially the MIKE Forces, the Greek-letter projects, and the intelligence augmentation—through the field force commanders' demands for more and better Special Forces capabilities and MACV response in authorizations and support enabling 5 SFGA to expand and improve. Comprehensive long-range

CONFIDENTIAL

UNCLASSIFIED

(U)

~~(C)~~

TABLE 3

5 SFGA Operational Statistics, 1 May–31 July 1967[a]

CTZ	CIDG		Operations				Contacts			
	Camps	Strength[b,c]	Squad[c,d]	Platoon[c,e]	Company and larger[c,f]	Total	Friendly initiated	VC initiated[c,g]	Contacts per operation[g]	Operations per contact[g]
I	9	3,900	5,278	817	148	6,243	69	165	0.466	2.1
II	26	11,900	14,058	10,990	3053	28,101	289	183	0.094	10.6
III	15	7,100	8,730	1,476	1060	11,266	189	188	0.178	5.6
IV	14	8,400	13,770	5,736	628	20,134	247	97	0.393	2.5
Total	64	31,300	41,836	19,019	4889	65,744	794	633	0.162	6.2

[a]Based on 5 SFGA Operational Report for Quarterly Period Ending 31 July 1967.[18]

[b]Rounded to nearest hundred; excludes MIKE Forces.

[c]Not used in computations in text.

[d]Squad operations generally reflect only camp day and night security patrols and ambushes that generate very few contacts.

[e]Platoon operations were seldom combat patrols but usually security patrols near the camps and, in the case of I CTZ, reconnaissance patrols that generally avoided contact.

[f]Company operations and larger were considered to include the great majority of offensive operations. Only this column is used in relation to contacts.

[g]VC-initiated contacts are irrelevant and not used in computing contacts per operation and operations per contact.

CONFIDENTIAL

UNCLASSIFIED

(U) One weakness of 5 SFGA operational reporting at this time was that the duration of company-sized off-site patrols was not noted. Thus one 6-day patrol presumably represented the same operational employment as two 3-day patrols, but the latter counted for twice the former. This was later rectified by a decision to report aggregate company days of operation for each reporting period.

PLANNING

(U) ~~(S)~~ Although a projection of the CIDG program and a concept of future operations were undertaken as early as 1962 during the early part of SWITCHBACK (the code name for the phase-over to USMACV responsibility and control) future planning on a comprehensive annual basis was not fully developed until 1966.

Commander, US Military Assistance Command, Vietnam, Directive

(U) ~~(S)~~ At a command conference in Nha Trang in August 1966, GEN Westmoreland directed the commander 5 SFGA to make a close examination of the present and proposed deployment of the group's operational detachments throughout Vietnam. He directed that each detachment be examined to ensure that it had a mission and a location that would enable it to exert its full potential. He suggested that A detachments and their CIDG strike forces be replaced where practicable by ARVN or RF/PF units and that any CIDG camp improperly located to carry out its mission be relocated. Planning was to be coordinated with Corps Senior Advisers and ARVN corps commanders.[1]

Concept of Operations

(U) ~~(S)~~ A concept of operations was accordingly developed by 5 SFGA, staffed by MACV J33, briefed to COMUSMACV on 14 September 1966, and forwarded to him and subordinate elements of the group in a letter dated 23 September. Its object was to provide during CY67 for the "use of assigned 5th Special Forces Group (Airborne) assets to the maximum of their potential by positioning them for optimum employment and coordinated action, and assigning tasks commensurate with their full capabilities."[4]

(U) ~~(S)~~ Offensive operations were to be the principal means to achieve overall objectives. Emphasis would be placed on Revolutionary Development, assisting Free World Military Assistance Forces (FWMAF), and increased participation of ARVN. The concept, presented in detail for each CTZ, projected the conversion of 17 CIDG camps to RF.

(U) ~~(S)~~ The campaign plan for 1967 embraced three major areas of effort:

(a) Strategic deployment of CIDG camps in the four CTZs.

(b) Employment of mobile guerrilla USASF/CIDG forces in areas not covered by CIDG camp operations.

(c) Employment of long-range reconnaissance forces provided to ARVN and FWMAF to include training of their organic reconnaissance capabilities.

Chapter 8

SPECIAL OPERATIONS

(U) ~~(C)~~ One of the chief characteristics of Special Forces is their capability to conduct brief or extended operations within territory dominated or controlled by enemy forces. Since the time of their deployment to South Vietnam to support US advisory operations to the Government of Vietnam (GVN), Special Forces have been tasked with special missions that have provided the greatest opportunity to validate and improve on Special Forces organization, training, equipment, and operating doctrine.

REQUIREMENTS FOR SPECIAL OPERATIONS

(U) ~~(C)~~ Special operations by USASF in Vietnam are planned and executed in furtherance of programs to fill three major requirements of the GVN and its supporting Free World Military Assistance Forces (FWMAF). The requirements are intelligence, denial to the enemy of unrestricted use of various human and material resources essential to the implementation of his strategic and tactical plans, and recovery of friendly personnel missing in action.

Intelligence

(U) ~~(C)~~ The paramount need of internal defense forces who must respond to the military operations of subversive insurgents is information on the strength, composition, disposition, and intentions of the insurgent forces. In modern subversive warfare, insurgents deliberately foster the impression of being everywhere at once yet nowhere. Reason and the principles of warfare dictate, however, that they possess fixed bases and other ground support systems and that their forces have unit organization and a clearly defined command and control structure.

(U) ~~(C)~~ In the tropical environment of Southeast Asia the insurgents' bases, surface lines of communication, and forces may be easily concealed and dispersed in the ubiquitous jungle. If the enemy is to be denied use of his bases and lines of support and if his forces are to be fixed and destroyed, the defenders must confirm his order of battle. The experience of Southeast Asia has amply demonstrated that, in that kind of tropical environment, reconnaissance on the ground remains an indispensable means of accomplishing this task.

(U) ~~(C)~~ Other intelligence requirements (for which no adequate substitutes for on-the-ground reconnaissance of jungled terrain are yet available) include

operations planning for the CIDG program was introduced in 1966 for CY67. The annual Concept of Operations combines strategic deployment and operational planning, and the determination of force requirements and support requirements incident thereto, with enough lead time for providing the latter two so that foreseeable changes and modifications to the CIDG program can be carried out as and when planned. Had events not taken the turn for the worse that motivated the US government to deploy combat troops to Vietnam in 1965, 5 SFGA operations throughout Vietnam would probably have continued much as they have in IV CTZ.

(U) ~~(S)~~ In the auxiliary role the USASF/VNSF/CIDG filled a need, but it was at the expense of diverting a significant portion of the total effort away from the original local-security objectives of the CIDG program except in IV and to some extent in I CTZ. This diversion of USASF-controlled indigenous assets and the development of special operations units for the field forces (discussed in Chap. 8, "Special Operations") suggest a possible new role for USASF in the context of Type I low-intensity conflict.

UNCLASSIFIED

TYPES AND CONCEPTS OF SPECIAL OPERATIONS

(U) Apart from ad hoc recovery operations, the special operations most frequently conducted in enemy-controlled areas are long-range reconnaissance patrols and mobile strike operations. Fundamental to both types is the concept that with proper training, organization, guidance, and support, personnel who are indigenous to the area of operations will achieve the greatest success in locating enemy troops, bases, and ancillary facilities. The concept of operations also holds that, by virtue of the irregular status of the mission forces and their dependence on US Army Special Forces (USASF) advice, assistance, and special logistic and administrative support as organized in the Civilian Irregular Defense Groups (CIDG) program, special operations are best conducted within the framework of the CIDG program. To remove special operations units from the umbrella of the CIDG program and attach them to conventional units that lack the authority and means to provide for the special needs of the irregulars would be most unsound. For these reasons, as well as for reasons concerning the capabilities and survivability of special operations forces and the sensitivity of their missions, they are utilized only in such ways as fully satisfy both their needs and the requirements of the missions they perform. Experience in Vietnam has shown that full satisfaction on both counts is ensured only when special operations forces are employed at or above major field force level.

Reconnaissance Patrols

(U) Long-range reconnaissance missions are executed by relatively small groups of specially organized, trained, and equipped USASF, Vietnamese Special Forces (VNSF), and ethnic-minority personnel. The patrols operate within designated reconnaissance zones (averaging 2 by 10 km) for up to 5 days at a time to gather information on enemy activities. Contact with the enemy is avoided. The small size of the patrols enables them to move within their mission areas with minimum risk of detection but also makes them highly vulnerable to destruction if caught unawares. In the practice of Vietnam, numerous patrols are committed within a broad zone (up to 50 by 30 km) that is subdivided into the smaller patrol reconnaissance zones.

(U) Various mixes of personnel by ethnic type are employed within patrols according to the specific mission of each, and missions are disguised as necessary by dress and behavior patterns appropriate to the area of operation. American personnel usually do not accompany patrols that must scout populated areas or employ civilian modes of transportation. The American presence would too easily compromise the patrol.

Mobile Strike Operations

(U) Mobile strike operations are conducted by irregular forces specially organized, trained, and equipped to rove the enemy rear for extended periods of time to conduct reconnaissance in force; to seek out and raid enemy bases; to interdict enemy lines of communication and support; to ambush and if possible to fix and destroy enemy small units; and to establish contact with the enemy's large units as a necessary prelude to their destruction by major elements

UNCLASSIFIED

the assessment of damage inflicted on enemy units, installations, and support facilities by aerial and artillery bombardment and the detection and assessment of the defenses of enemy camps holding friendly prisoners of war.

Harassment/Interdiction

(U) ~~SECRET~~ As the communists expanded their force structure and increased its combat capability from small-scale guerrilla actions to the threshold of positional warfare, they necessarily developed their lines of communication and their system of fixed bases for the support and direction of their forces in the field. In so doing they assiduously exploited every available advantage of vegetation, terrain, and boundaries. The basis of the support system is a complex network of roads, trails, and waterways emanating from the Democratic Republic of Vietnam (DRV) and proceeding to the coastal lowlands and Mekong Delta of South Vietnam through the heavily forested highlands of the Chaîne Annamatique and by way of the South China Sea.

(U) ~~SECRET~~ The capacity of the system to move men and materiel from the DRV to the Republic of Vietnam (RVN) consistently increased as the system was expanded and improved. Traffic volume (vehicle, animal, foot, and watercraft) increased in direct proportion to increases in system capacity. Despite the fairly steady (as measured in years) increase in volume, traffic flow remained markedly irregular. (For many reasons the system cannot be expanded infinitely, and a variety of physical constants set an ultimate limit to its throughput capacity.) Both the rate and the line of flow of men and materiel through the system have varied considerably in the short term with seasonal changes, the interdiction and subsequent repair or relocation of routes, and changes in enemy campaign plans. Hence at any point in time a particular trail or set of trails that may serve as a route of movement, as well as the base facilities associated with it, may or may not be used. Given the overriding need of the GVN and its FWMAF to fix and destroy the enemy, there naturally developed a deadly "hide-and-seek" contest in which the defenders have been required to keep a constant check on trails and likely base sites for evidence of enemy presence.

(U) ~~SECRET~~ The very presence of special operations forces in the enemy's rear area has been a source of harassment to him and has required him to allocate resources to the defense of his sanctuaries. In addition, the interdiction of his trails, the raiding and destruction of his facilities, and the ambushing of his units have disrupted his plans and degraded his capability to mount offensive operations in the densely populated forward areas over which he needs to establish dominion.

Recovery

(U) ~~SECRET~~ The protracted and undeclared nature of the subversive warfare in Southeast Asia has heightened the need for intelligence on the enemy's prisoner of war camps. If friendly personnel are to be recovered from enemy hands at the earliest possible date, special action by friendly forces, rather than prisoner-exchange agreements, has offered the most promising means of recovery. Rapid and special action is also required to recover friendly pilots downed in enemy-controlled or contested territory.

Project Delta operates under joint USASF/VNSF command, is directly responsive to the requirements of Military Assistance Command, Vietnam (MACV) and the Joint General Staff (JGS) anywhere in Vietnam, and had the Army of the Republic of Vietnam (ARVN) 91st Abn Ranger Bn assigned as its immediate reaction force. As of mid-1967, however, projects Omega and Sigma were commanded by USASF, were respectively responsive to the requirements of I FFORCEV and II FFORCEV, and had CIDG Mobile Strike (MIKE) Force companies assigned as immediate reaction forces.

(U) ~~(C)~~ Mobile Strike Forces. MIKE Forces are highly trained CIDG units organized by separate companies at C detachment (corps/field force) and Special Forces Operational Base (SFOB) level for use as reserve/reinforcement elements to CIDG camps threatened or under attack by superior numbers of the enemy. MIKE Forces are also capable of conducting raids, ambushes, combat patrols, and other small-scale conventional combat operations independently, in conjunction with other CIDG units, or in support of conventional forces.

(U) ~~(C)~~ Originally organized in 1964 under unilateral USASF command, the MIKE Forces were brought under joint USASF/VNSF command in December 1966. As of mid-1967 the SFOB and the C detachment (Co A) in III CTZ each had five MIKE Force companies. Companies C, B, and D in I, II, and IV CTZs respectively had three MIKE Force companies each. MIKE Forces are flexibly organized but a typical company has a headquarters element, three rifle platoons, a weapons platoon, and a reconnaissance platoon. As in the case of other special operations forces, the MIKE Forces are airborne qualified.

(U) ~~(C)~~ Mobile Guerrilla Forces. The Mobile Guerrilla Forces (MGFs) were created in 1966 in refinement and amplification of the mobile strike concept. They were also organized as separate companies and closely resembled the MIKE Forces in unit structure. Counterpart VNSF were not originally included in the MGF structure although it was planned to incorporate them into the organization at an early date. Each MGF was wholly commanded and controlled by a USASF A detachment. The MGFs were also organized without a weapons platoon, but an M60-machinegun squad was included in the company headquarters. MGFs were deployed by CTZ and operated as self-sufficient units in enemy-controlled areas for periods in excess of 30 days. Because of the basic similarities in organization and capabilities of MIKE Force and MGF units, it was decided in late 1967 to refer to and commonly employ them as Mobile Strike Forces. A type Mobile Strike Force organization is shown in Fig. 13.

Training

(U) ~~(C)~~ Special operations unit training consists of repetitive practical exercises in advanced infantry and special warfare tactics and skills applicable to the environment of mainland Southeast Asia. The training is simplified to the utmost for the benefit of the largely illiterate ethnic- and religious-minority personnel who comprise the forces. Emphasis throughout is on learning by doing by detail.

(U) ~~(C)~~ The manpower taken into the special operations forces has usually had prior service in CIDG camp strike forces and has therefore been through one or more basic light-infantry training cycles. Special operations training proceeds from this base of knowledge. As a first step all personnel are

of friendly air and ground forces. As developed by Special Forces in Vietnam, the concept of mobile irregular warfare in support of counterinsurgency operations in Phases II and III of a communist "war of national liberation" is predicated in part on the availability both of tactical and strategic air power and of an organized force, of at least battalion strength and with organic or provided transportation resources, for immediate commitment to major engagements initiated by the mobile irregulars.

FORCE STRUCTURES

(U) ~~(C)~~ USASF-advised special operations force structures have evolved and grown with the steady increase in the intensity of the conflict in Vietnam and the proportionate increase in requirements for timely intelligence on enemy activities. Throughout their evolution and growth the special operations forces have been tailored according to two basic criteria: simplicity and economy. Practical military rather than financial considerations prompt the concern for simplicity and economy. Dollar savings are important and are always sought as a matter of course, but in the special operations of USASF in Vietnam, the difference between success and failure can too easily be one man or one item of equipment that is nonessential to the mission. The utmost economy of force and simplicity of organization are therefore sought as guarantors of success.

Strength and Organization

(U) ~~(C)~~ Special operations mission forces are structured from the basic building blocks of US and counterpart Special Forces detachments and irregular indigenous forces platoons and companies. In some instances regular indigenous forces battalions may comprise a substantial part of the force. All personnel are airborne qualified.

(U) ~~(C)~~ The A detachment is the keystone of the special operations force structure. Depending on the specific type and size of force desired, the USASF A detachment may be teamed or combined with a counterpart VNSF detachment. As many A detachments are assembled as are necessary to support and guide the size of force desired. For larger forces, the A detachments are organized into modified operational B detachments. (A TOE B detachment in an operational role commands four A detachments.) The personnel and skills represented in the A detachments are utilized to organize and train the irregular personnel assigned.

(U) ~~(C)~~ Greek-Letter Units. The long-range reconnaissance projects Delta, Omega, and Sigma exemplify one type of special operations force. Each of these projects has a strength of about 600 personnel plus an advisory command element organized as a modified B detachment. Each project is organized into a reconnaissance element and a reaction force. The typical reconnaissance element comprises eight roadrunner teams of four indigenous personnel each and 16 reconnaissance teams of two USASF and four indigenous personnel each. The reaction force is a battalion equivalent of three or more companies.

(U) ~~(C)~~ Though the strength and organization of the various Greek-letter projects are similar, there are some important differences between them.

qualified for airborne operations. They are then trained through repetitive lectures, demonstrations, and practical exercises in a wide range of subjects and skills essential to the successful conduct of operations in enemy-controlled territory. The more important subjects that must be mastered are enumerated in the following list:

(U) (a) Silent movement.
(b) Methods of tracking and observation.
(c) Use of map and compass.
(d) Use and care of special signaling devices.
(e) Methods and techniques of infiltration and exfiltration of reconnaissance zones and areas of operations.
(f) Use and care of special weapons.
(g) Care and treatment of minor wounds and illnesses.
(h) Methods of execution of raids and hasty ambushes.
(i) Defense of bivouac or mission support site.
(j) Procedures for "sterilizing" landing zones, drop zones, and stopover points.

(U) The initial training period covers 5 to 6 weeks and is based on a 6-day work week and a 9- to 10-hr training day. Training is continuous insofar as special operations forces engage between operations in refresher training and field tactical exercises to improve individual skills and unit proficiency. The typical training schedule (see App A) is divided into two phases—base camp and field exercise. The base-camp phase provides for up to 25 days of instruction and practical exercise in 38 subjects. Instruction is supplemented nightly by training films. In the field-training phase the troops engage progressively in squad, platoon, and task-force exercises.

Command and Control

(U) The command and control structure of a special operations force and the procedures it employs both internally and between itself and higher headquarters are the simplest that can be devised consistent with its organization, missions, capabilities, and support requirements.

(U) ~~(S)~~ Internal. For forces organized jointly with host-country counterparts, command is vested in the counterparts but control in operational situations may be exercised by either counterpart or USASF personnel, especially when USASF and host-country-counterpart A detachments have been formally organized or have arranged on an informal basis to operate in a joint and combined manner. In forces that, for whatever reason, lack a counterpart VNSF command and control element, internal command and control are vested in and exercised through the USASF operational detachment assigned to the force.

(U) ~~(C)~~ External. Command and control arrangements between special operations forces and higher headquarters vary with the missions and task organizations of the forces. For the most sensitive and dangerous missions, command and control are normally exercised directly and jointly from the highest US and Vietnamese headquarters to the forces in the field. As missions are progressively less sensitive in nature, command and control are passed to subordinate headquarters. In line with the modern practice of distinguishing between command and operational control, the US command and control lines follow divergent paths from the highest headquarters in-country through intermediate levels of

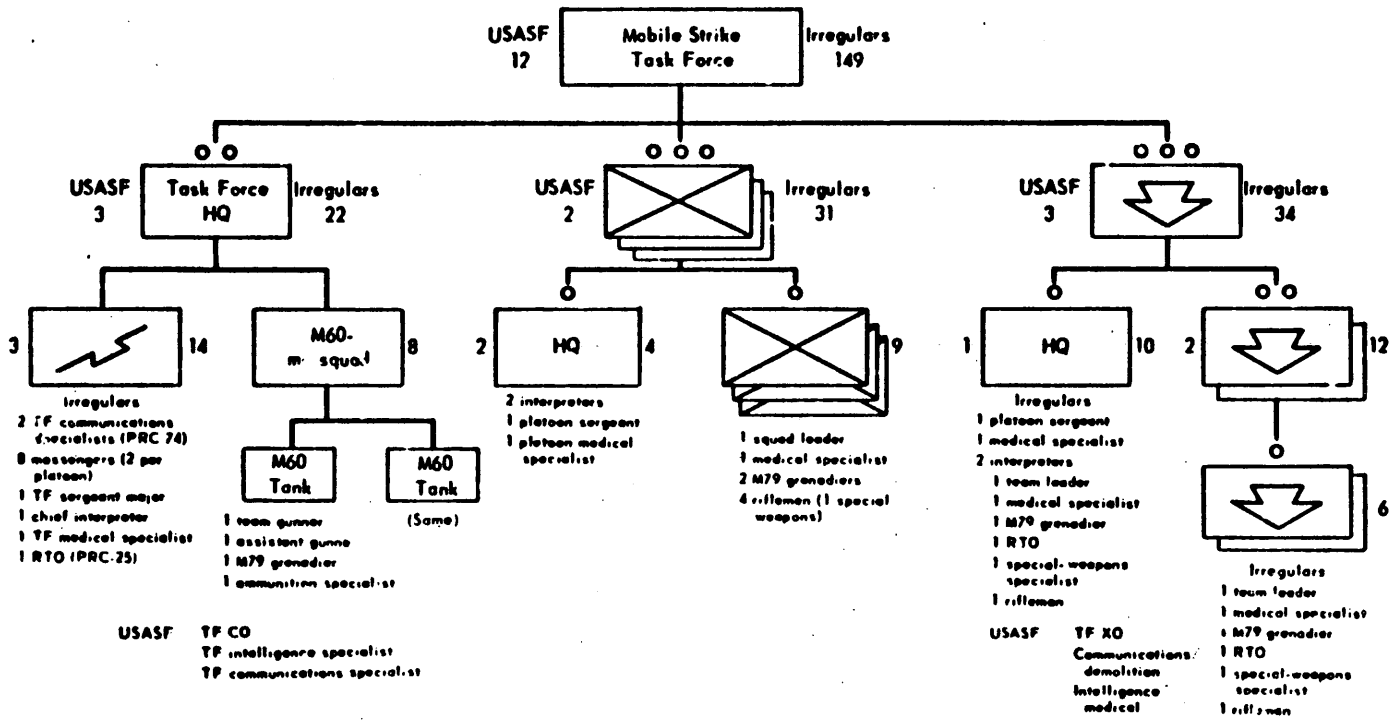

(U)

Fig. 13—Type Mobile Strike Force Organization
(Formerly Mobile Guerrilla Force.)
RTO, radio technician operator; mg, machinegun.

(U) (C) Planning begins with a detailed assessment of the designated operational area. All available data on the physical and human geography of the area and on the probable and possible location of enemy forces and facilities within it are collected and analyzed. Relevant data are displayed on maps, and primary and alternative routes of movement for the friendly force are selected and marked. Sources of data for area assessments are maps, intelligence reports, aerial photography, prisoner-interrogation reports, and after-action reports of friendly forces that may have previously operated in the area. If possible, the area-assessment planning staff checks the accuracy of its assessment through visual reconnaissance flights over the proposed operational area. Such flights are especially important for the final selection of primary and alternative helicopter landing zones for infiltration and extraction.

(U) (C) When the area assessment has been completed, operational orders are issued, and the special operations force is staged as necessary to a forward operating base (FOB). Staging involves the transport of men and materiel and is usually accomplished by airlift. If only a few men and a small amount of materiel are to be moved, Army or Marine Corps helicopters and light fixed-wing aircraft may suffice to accomplish the lift. For larger operations, USAF C-7A and C-130 aircraft are employed.

(U) (C) On arrival at the FOB, the force is inspected for readiness and the tactical-command element presents a "briefback" to the senior officers responsible for operational command, control, and support, immediately before commitment. The briefback amounts to a detailed presentation of the operational plan and is designed to ensure that every tactical commander (and for small teams, every member) knows precisely what his responsibilities are as well as how, when, and why he must discharge them under the widely differing sets of circumstances that may be encountered during the operation.

(U) (C) For reconnaissance missions, the precise methods and procedures for accomplishing each task associated with the mission are presented in exceptional detail. All are the products of the hard experience of Vietnam. Covered in the briefback are such items as the order and manner of exit from the helicopter that will introduce the team into the reconnaissance zone, the schedule of movement within the area, procedures for breaking contact with the enemy, and the schedule and manner of exfiltration.

Infiltration

(U) (C) Much of the success of special operations depends on surprise. In addition to stringent security to safeguard plans, numerous measures are employed to deceive the enemy. Deception is most important at the outset of the operation. In the practice of Vietnam, the force infiltrates by land, air, or water as befits the locale, the season, and the size of the force. If, for example, the area of operations is not normally and routinely overflown by friendly aircraft or lacks suitable helicopter landing zones or parachute drop zones, the force may infiltrate overland or perhaps by small craft. The helicopter is, however, the usual means of infiltration.

(U) (C) The Vietnam experience has shown that infiltration by helicopter is best accomplished at last light when pilots can still see well enough to insert the force and have a few minutes to slip away from the landing zone as both force and helicopters are being enveloped by protective darkness. Enemy

UNCLASSIFIED

command before becoming united again either at USASF C detachment level or within the mission force in the field. In mobile strike operations, for example, US operational control passes from MACV to major field force (e.g., III Marine Amphibious Force (MAF), I FFORCEV) and thence through the Special Forces company (C detachment) headquarters to the mission force. Command, on the other hand, proceeds from MACV to US Army, Vietnam (USARV) to HQ 5 SFGA to C detachment to mission force. Though it may occasionally be excluded from either or both command and control chains, the 5 SFGA headquarters is nonetheless always engaged in some way in providing administrative, logistic, and other support to the mission forces.

Support Systems

(U) (S) Special operations forces receive administrative, logistical, communications, and other support through the 5 SFGA and the CIDG program. Army aviation attached to the 5 SFGA provides some direct helicopter assault and lift support, and the US Air Force (USAF) provides airlift for large troop and supply movements. The US and Vietnamese Air Forces render other direct aerial resupply support and also provide airborne and other tactical radio relay links as required. In I CTZ, US Marine Corps (USMC) aviation provides direct support in similar ways.

(U) As in every other aspect of special operations, support arrangements are tailored to the mission and composition of the force. Simplicity and economy are as much emphasized in support arrangements as in force organization and command and control structures.

OPERATIONAL METHODS AND TECHNIQUES

(U) The special operations of USASF, VNSF, and civilian irregulars in Vietnam have on the whole been highly successful. The successes are attributable in part to the superior organization, training, and support of the forces committed, and in other part to the development and application of new methods and techniques of special warfare. Analysis of the operations reveals that the most successful of the new methods and techniques are simple in concept and are designed to preserve secrecy, promote subterfuge, achieve surprise, and ensure survival. These are, of course, the traditional goals of guerrilla forces in their conduct of unconventional warfare against a conventionally organized enemy. Their being sought by the defending forces in Vietnam should not, however, be construed to mean that Special Forces have endeavored "to outguerrilla the guerrillas." In seeking these goals and in devising improved methods and techniques to achieve them, Special Forces have only applied relevant principles of special warfare to the conduct of internal defense operations.

Planning and Staging

(U) (S) With but few exceptions, each special operation is carefully planned in advance, and forces are staged from main to forward bases before commitment. The time required to plan each special operation and to stage the forces in the area varies with the type and urgency of each mission.

UNCLASSIFIED

(U) (C) Stealth is the principal characteristic of movement by special operations forces. Though the enemy may soon become aware of their presence, it is essential that he remain ignorant of their exact location. Movement must be as silent as possible. Visual (hand and arm) signals replace voice commands; voice radio contacts are held to a minimum; weapons and equipment are padded or taped to prevent rattling or the emission of metallic sounds when they are brought in contact with rocks or underbrush; and march silence is strictly observed.

(U) (C) The enemy has proved quite adept at detecting and tracking such forces even when these precautions are taken. His countermeasures consist mainly of (a) placing guards at trail junctions, stream crossing points, and other such places to signal information on the movement of the force through a simple code of rifle fire and (b) having a few trackers follow the force at a safe interval to chart and report on its movements. The enemy also monitors voice radio frequencies normally used by friendly forces for tactical command and control. Feints, ambushes, booby traps, frequent changes in the apparent direction of movement of the force, and strict radio silence are employed to nullify the effectiveness of the enemy countermeasures.

Refuge

(U) (C) Suitable sites for bivouacs, rests, resupply, and the temporary basing of the force in the field are carefully assessed and plotted before each mission. Sites are designated as primary or alternative according to the overall plan of movement and the known or estimated adequacy of the cover, water, and defensibility of the terrain associated with them. Special operations are dynamic rather than static, and thus a force seldom expects to occupy a refuge site for more than half a day. An important exception to the general rule is a temporary base or Mission Support Site (MSS) for mobile strike operations. By means of an MSS the MIKE Force can break down into platoon- and squad-sized patrols to comb a suspected enemy refuge area. Prolonged use of an MSS tends to invite enemy attack and is therefore avoided.

(U) (C) Friendly refuge sites are carefully policed when the force departs. Enemy trackers are quick to search evacuated sites for scraps of intelligence on the strength and intentions of the force, and they frequently dig into garbage pits for such evidence. Special operations forces have found it useful to booby-trap garbage pits to discourage such probing. Self-destruction devices must, however, be so employed as to prevent injury to other friendly forces and friendly noncombatants who may occupy the site at some later time.

Resupply

(U) (C) The nature of the internal defense mission of Special Forces in Vietnam has required them to develop new techniques for resupply in the field. Experience has shown that such forces regardless of size cannot carry much more than a 5-day supply of food, ammunition, and other necessities. Accordingly, each operational plan must provide for resupply at 3- to 5-day intervals at predetermined sites.

(U) (C) In an unconventional warfare role, special operations forces would be expected to live off the land and to replenish their ammunition and materiel

awareness of this method of infiltration (and possible use of it elsewhere in Southeast Asia) necessitates further deception in regard to the exact point of infiltration. The helicopters therefore may set down briefly at three or more points in the vicinity of the primary landing zone to create uncertainty in the enemy mind as to the exact point of insertion. A variation of this technique is also employed when small reconnaissance parties are inserted. A trio of helicopters flies low in trail formation with sufficient separation to afford the lead helicopter time to touch down momentarily, discharge its reconnaissance team while the other aircraft pass over the landing zone, and rejoin the flight as the last machine in trail.

(U) (C) Communist forces in South Vietnam are very sensitive to these special operations and have adopted simple but effective countermeasures against infiltration of their refuge areas. Chief among these are implanting long (usually bamboo) poles upright in jungle clearings potentially useful as helicopter landing zones, densely covering such clearings with punjii stakes, and assigning guards to clearings in the vicinities of their troop units and installations. Clearings studded with bamboo poles are easily recognized by staff planners during aerial reconnaissance of prospective operational areas. Punjii stakes in high grass, as well as the presence of guards, are seldom detected beforehand, however, and are often encountered. Casualties resulting from punjii stakes or from resistance by guards or any overt sign that the enemy has been alerted to the infiltration are causes for immediate extraction.

(U) (C) Under some circumstances infiltration is best accomplished on foot. Roadrunner and reconnaissance teams are quite easily inserted into a reconnaissance zone from a base camp under cover of darkness or even during daylight hours if the camp is known to dispatch small patrols in random directions as a matter of routine. If such is not the case, the special reconnaissance team may depart the base as part of a larger patrol force and then quietly break away from the force at a preselected time and place.

(U) (C) A similar technique may be employed for a company-sized or larger force. After establishing a routine of departing from the returning to a base at random intervals of time and direction, the force penetrates its operational area on an indirect approach. This technique offers a high probability that the enemy will fail to detect the penetration and, equally, that enemy agents in the vicinity of the friendly base camp will be unable to report an unusual development in camp operations.

Movement

(U) (C) All movement by special operations forces is carefully planned. The survival of small reconnaissance teams depends on each individual team member's knowing and rigidly following a precise route and schedule of movement. The plan may provide for the deliberate temporary separation and subsequent rendezvous of team members but must in any event provide for rendezvous at precise times and locations if separation occurs under enemy pressure. MIKE Force movement is planned in less exacting detail but nonetheless follows preselected routes unless terrain and vegetation factors, an engagement with the enemy, or the unexpected appearance of a lucrative target of opportunity justifies a change in plan. With more men and heavier firepower a MIKE Force is of course better equipped to engage and defeat the enemy.

are the most vulnerable to destruction by enemy forces; therefore the special operations command and control element must be prepared to extract teams from reconnaissance zones at a moment's notice.

(U) ~~(C)~~ Extraction of small patrols is ordinarily accomplished by helicopters. If time and circumstance permit, these touch down momentarily and recover in standard fashion. If the friendly force must be recovered from a position unsuited to touchdown, a block-and-tackle rig is employed for hasty lift. The typical rig, called a McGuire Rig after the Special Forces sergeant who devised it, is a simple rope sling into which a man on the ground may quickly fasten himself in a seated position or, under urgent circumstances, simply affix his wrist and be plucked from danger in a matter of seconds by the rapid ascent of the hovering aircraft.

(U) ~~(C)~~ Procedures for the evacuation of casualties and for the emergency evacuation of a force larger than a reconnaissance team are more complex. The decision to evacuate or extract poses a difficult problem that requires careful weighing of such factors as the mission requirements; the constraints of weather, time, and the site of the force; and the degree of danger facing it and the evacuating aircraft. The decisions must be made without delay, and the eventualities must be provided for in the operational plan. It is essential that alternative procedures be explained and rehearsed under simulated conditions in premission training programs.

SIGNIFICANT OPERATIONS AND RESULTS

(U) ~~(C)~~ Table 7 presents summary data for special operations conducted by USASF in Vietnam during the 9-month period July 1966–March 1967. The data have serious limitations but are offered as indicators of the magnitude of effort. The user is cautioned against drawing what would be statistically accurate but nonetheless substantially invalid conclusions. For example, if the total number of enemy contacts (134) is treated as a function of team and company missions (295) it appears that contact was achieved 45 percent of the time. This finding looks good when compared with other statistical data that tend to show that large US units make contact less frequently in routine search-and-destroy operations. The conclusion is nonetheless invalid because it fails to take into consideration that special operations reconnaissance teams seek to avoid contact with the enemy. Because teams often operate in association with companies, and companies frequently react against targets acquired by teams, it is impossible without further detailed investigation to determine the origin of the contacts for most of the operations in Table 7.

(U) ~~(C)~~ An important exception occurs in four mobile strike operations where companies are known to have operated independent of teams. Data are relatively complete for these operations (lines 18, 20, 21, and 30), which averaged 13 days in length for a total of 53 company days. The number of contacts generated (36) yields an average of 0.68 contacts per company day of operation or one contact every 1.5 days, and the kill ratio of 120 enemy to 4 friendly is an even 30 to 1.

(U) ~~(C)~~ To the extent that kill ratios are a standard (although often misleading) criterion of success or failure, the overall ratio of 13 enemy killed to 1 friendly is highly favorable, and the ratio of 45 enemy to every USASF loss is even more so.

(U) ~~(C)~~ What the table fails to show in terms of results cannot be shown because of inability to quantify qualitative data, i.e., the acquisition of information (intelligence), often in small bits, on where the enemy was or was not at any given moment. One may validly infer from the "Air strikes" column the frequency with which substantial numbers of enemy troops and sizable physical structures were found by men on the ground. Here too, however, the data fail to reveal the relative size and importance of targets acquired and destroyed. After-action reports indicate that the targets included enemy troops in position, way stations, food caches, materiel storages, and men and materiel in transit.

PROBLEMS

(U) ~~(C)~~ The special operations of 5 SFGA have presented substantial problems seldom encountered by conventional tactical units and only rarely encountered in routine operations by camp strike forces. Major problems have concerned the care and evacuation of casualties and the emergency extraction of forces from enemy areas.

Care of Casualties

(U) ~~(C)~~ In mobile strike operations the evacuation of casualties or the emergency extraction of an entire force from an operational area is a troublesome undertaking that requires hard decisions by the force commander and his controlling headquarters. Under most circumstances the occurrence of disabling casualties among a small reconnaissance party is sufficient cause for immediate hasty evacuation from the reconnaissance zone. Even though the team might break contact and elude the enemy, little probability remains that it could hold to the rigid timetable of its operational plan. The wisest course is to terminate the mission and to complete the reconnaissance with another team operating under a different plan at a later date.

(U) ~~(C)~~ A few casualties among a mobile strike column deep in enemy territory do not seriously impair its capability to complete its mission. Yet the casualties must be cared for. There are only two choices—evacuate them at the first opportunity or keep them with the column and care for them on the march. Two considerations influence the choice—the gravity of the injuries and the security of the column. Experience in Vietnam has shown that in some instances commanders have been faced with difficult decisions involving the proper weighting of the security factor.

(U) ~~(C)~~ Excessive concern for security can result in too stringent an application of doctrine for unconventional operations in support of general war to the circumstances of the conflict in Southeast Asia. It may not always be apparent to the men on the ground, but there are substantial differences between the operations of friendly irregulars in enemy-controlled territory incidental to the Vietnamese situation and the operations that irregulars might conduct in, for example, South Central Siberia in time of general war. In the latter instance the requirement to carry casualties with the column would result as much from the unavailability of friendly air support or other means of evacuation as from the requirements of security.

from captured enemy stores and caches of clandestinely acquired items. There is no need to follow such procedures in an internal defense role where resupply is easily accomplished; yet the need to avoid betraying the location of the force to the enemy remains the same. Standard airdrops in daylight hours are easily observed by an alert enemy, and night drops in jungled terrain stand a slim chance of being recovered.

(U) (C) Two methods have been devised to facilitate resupply by air during daylight. One is to disguise the resupply drop as a bombing raid and the other is to employ a radar-assisted high-altitude release with delayed parachute openings for resupply bundles. Both methods are effective, and both can also be used to resupply camps under attack.

(U) (C) In the bombing method, supplies are packed into modified napalm containers that are then affixed to A-1E aircraft. The aircraft deliver the supplies to a designated point as if they were canisters of napalm. A drag parachute in the container deploys and breaks its fall immediately before impact with the ground. During the delivery, other aircraft may deliver live ordnance in the vicinity of the resupply point, especially if the enemy is nearby and is seeking to close with the special operations force. Even if the enemy is not in the immediate vicinity, the delivery of live ordnance in conjunction with the resupply serves to mask the entire operation as a routine preplanned air strike on suspected enemy positions.

(U) (C) The delivery system for radar-assisted high-altitude resupply was still in an experimental stage in mid-1967. In theory it would overcome one of the weaknesses of the dive-bombing system, namely that pilots must have adequate visibility to complete the mission successfully. Inability to effect resupply through cloud cover has occasionally hampered special operations in Vietnam and was a critical factor in the fall of A Shau in March 1966. Visibility is, however, equally important to the forces on the ground where double and triple canopies of jungle can prevent observation of the fall and impact points of supply canisters and bundles even slightly beyond the edge of a sizable clearing. In a resupply operation by A-1E aircraft in I CTZ in March 1967, for example, a MIKE Force recovered only 8 of 20 canisters dropped within an average of 100 meters from its position. The inability of the men on the ground to observe the drop and subsequently locate the canisters in the dense jungle growth caused the failure.

Evacuation, Extraction, and Exfiltration

(U) (C) Every special operations plan must provide for both the routine and emergency removal of individual members or the entire force from the designated area of operations. Planning is necessarily contingent on the relative influence that innumerable variable factors may exercise on the immediate tactical situation. Under optimum circumstances, and after realization of its objectives, a special operations force may simply walk out or be picked up by aircraft and lifted out of its operational area at a planned point in time and space. The special operations of USASF in Vietnam had been so successful through mid-1967 that most had terminated according to plan.

(U) (C) The probability that a force may have to be recovered from an operational area before planned termination increases in inverse proportion to the size of the force committed. Roadrunner and long-range reconnaissance teams

(U)

TABLE 7

5 SFGA Special Operations Operational Summary, Long-Range Reconnaissance and Mobile Strike Missions, July 1966–March 1967

Line	Unit	Operation designation	Date	CTZ	Team missions[a]	Company operations[a]	Enemy contacts	Air strikes	USASF			Ranger/MIKE			Enemy		
									KIA	WIA	MIA	KIA	WIA	MIA	KIA	WIA	CIA[b]
1	B-52	9-66	15–29 Jul	II	12	—	1	—	—	—	—	—	—	—	3	—	—
2	B-52	10-66	9 Aug–5 Sep	III	27	4	19	12	1	4	—	1	2	1	128	3	—
3	B-50	1-66	11–20 Sep	II	8	—	1	3	—	—	—	1	—	—	1	—	—
4	B-56	Golf	11–18 Sep	III	6	—	4	2	—	—	—	—	—	4	15	3	—
5	B-56	Tazewell	23 Sep–6 Oct	III	5	1	2	5	—	2	—	—	—	—	10	—	—
6	B-50	Clinton	27 Sep–31 Oct	II	22	4	7	9	—	3	—	1	1	—	6	5	2
7	B-56	Fond du Lac	12–25 Oct	III	8	1	3	3	2	—	—	1	1	—	17	2	—
8	5 SFGA	Black Jack 21 (Hooker II) TF 777	13 Oct–9 Nov	II	—	1	na[c]	na	na	na	na	na	na	na	3	—	—
9	B-52	13-66-I	14 Oct–18 Nov	I	13	4	2	15	1	—	—	—	3	—	2	9	—
10	Co C	Black Jack 11 (Longstreet)	17 Oct–23 Nov	I	—	1	2	na	1	—	—	3	2	—	—	—	—
11	B-56	Point Lansing	4–9 Nov	III	na	na	na	na	na	na	na	na	na	na	na	na	na
12	B-50	Black Hawk I	9 Nov–4 Dec	II	10	7	na	2	—	—	—	—	—	—	—	—	—
13	B-56	5-66	10 Nov–6 Dec	III	na	na	na	na	na	na	na	na	na	na	na	na	na
14	B-52	13-66 II	26 Nov–24 Dec	I	8	5	2	10	1	—	—	1	—	1	15	—	—
15	Co B	Black Jack 22 TF 768	10 Dec–12 Jan	II	—	1	2	na	1	1	—	—	2	—	11	—	—
16	B-50	Black Hawk II	12 Dec–12 Jan	II	18	14	2	8	—	—	2	1	—	—	1	1	—
17	B-56	Toronto	4–8 Jan	III	na	na	na	na	na	na	na	na	na	na	na	na	na
18	Co A (A-303)	Swamp Fox Black Jack 31 (MGF 977)	8 Jan–7 Feb	III	—	1	24	27	—	1	—	1	1	—	54	6	8
19	B-50	1-67	9–21 Jan	II	4	5	4	2	—	—	—	1	3	—	15	—	—
20	B-56	Sheboygan	17–19 Jan	III	—	1	1	1	—	—	—	—	—	—	1	3	—
21	B-56	Nashville	18–19 Jan	III	—	1	4	2	—	—	1	3	2	—	17	2	1
22	5 SFGA	Black Jack 41 (TF 189)	19 Jan–20 Mar	IV	—	1	na	na	na	na	na	na	na	na	na	na	na
23	B-56	Regina	20 Jan–6 Feb	III	7	1	5	3	—	1	—	1	11	—	27	—	3
24	B-50	Stark	22 Jan–12 Feb	II	14	4	2	6	—	—	—	—	—	—	1	2	—
25	B-50	Dawes	3 Mar–3 Apr	II	22	3	6	4	—	—	1	2	6	—	2	2	—
26	B-52	Knox	4 Mar–3 Apr	II	28	7	27	11	—	1	—	2	5	—	3	—	—
27	B-56	Ocean Drive	10–19 Mar	III	13	2	7	—	1	5	—	—	—	—	—	—	—
28	B-50	Buckner	15 Mar	II	—	—	—	—	—	2	—	—	—	—	—	—	—
29	B-52	5-67	15 Mar	I	—	—	—	—	—	—	—	—	—	—	—	—	—
30	Co A (A-304)	Black Jack 32 (TF 966)	1 Mar–3 Apr	III	—	1	7	2	—	—	—	2	6	—	32	0	0
Total[d]					225	70	131	187	8	20	4	21	18	6	361	38	14

[a]Missions of teams were to avoid contact; missions of companies were to establish contact.
[b]Captured in action.
[c]Not available.

[d]

Item	KIA	WIA	MIA	CIA
Total friendly	29	68	10	
Total enemy	361	[illegible]	14	

UNCLASSIFIED

Chapter 9

LOGISTIC SUPPORT

SITUATION IN LATE 1964

(U) ~~(S)~~ In the early phases of the Civilian Irregular Defense Groups (CIDG) program the US Mission employed a flexible and militarily unorthodox logistical system to supply CIDG camps. The Army adopted or adapted many of the procedures to develop a logistical system that is unique in US military history. It was not a part of the US Military Assistance Program (MAP) for Vietnam and operated independent of Military Assistance Advisory Group (MAAG) and ARVN control. Its salient features were as follows:

(a) Control of materiel, transportation, and funds (including CIDG troop pay) was kept in US hands down to the point of issue to the ultimate users.

(b) Local purchases of goods and services were authorized at all levels, with cash from current operating funds.

(c) Requisitioning, justification, stock control, and other procedures were (initially, at least) simple and informal.

(d) Deliveries of equipment and supplies to A detachments from higher echelons were made from the main supply point (the Logistical Support Center (LSC)) at Nha Trang, directly to the A detachments.

(e) Air transportation (landed or dropped) was the predominant method of delivery.

(f) "Maintenance by Replacement" took the place of repairing equipment on site.

(g) A special Counterinsurgency Support Office (CISO) was established in HQ, US Army, Ryukyu Islands (USARYIS), Okinawa, to control and expedite USASF external logistical support.

(h) US balance-of-payments control regulations were waived, permitting unlimited direct overseas procurement.

(i) A special quick-reacting procurement (QRP) procedure was devised to provide quick procurement service in CONUS for unusual needs.

(j) Formal accountability was dropped on shipment of materiel to USASF, and justification of requests was not required above the level of the Special Forces Operational Base (SFOB).[22,23]

(U) Rations for CIDG personnel; petroleum, oils, and lubricants (POL); and other consumables were obtained in-country through local and central procurement. Construction materials, labor, and other services were also

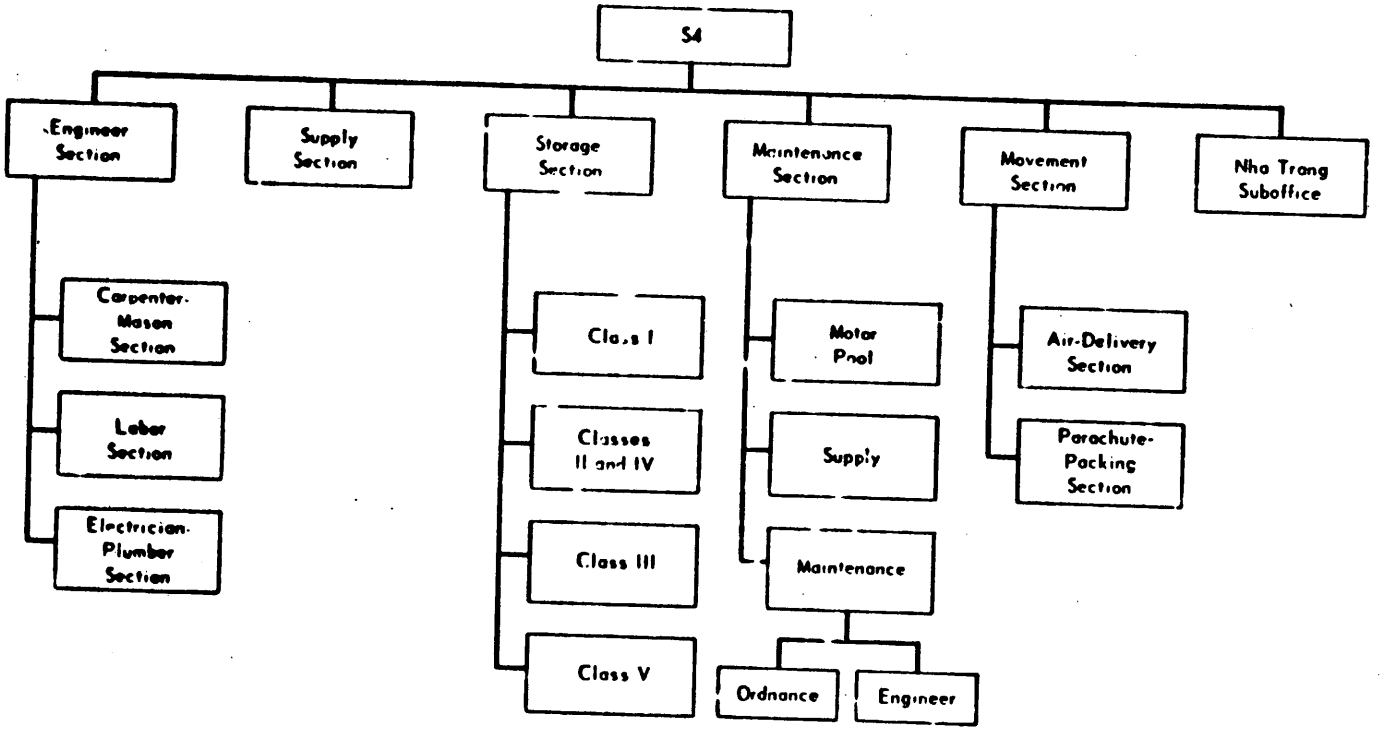

(U)

Fig. 14—S4 Organization, Co B, Pleiku

Strength: 4 officers, 23 enlisted men, 63 indigenous personnel (Spring 1967).

was written for each section, along with a more comprehensive function-and-task list. The grouping of the movement and storage, supply, and maintenance sections under the operations officer ensured that these three related functions would operate in close harmony (see Fig. 15).

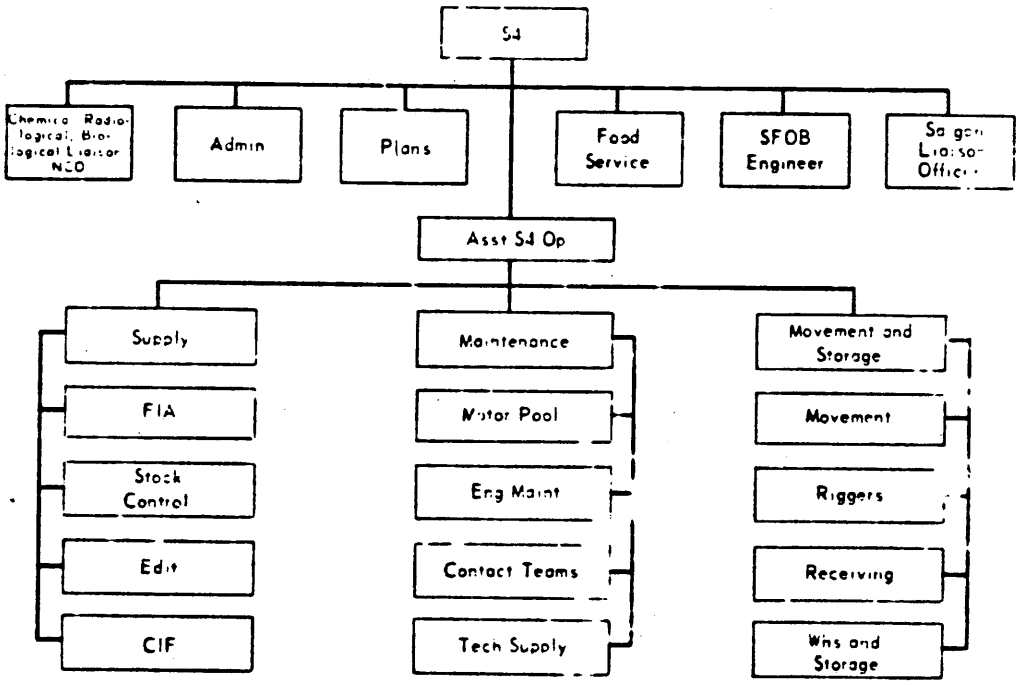

(U) Fig. 15—Special Forces Group S4 Section

Transportation

(U) ~~(C)~~ Cargo was airlifted from the LSC to the FSPs by C-130 and C-123 transport aircraft of the USAF and to a limited extent by CV-2's (Caribous) and other smaller aircraft of the Army that were used principally from the FSPs to the B and A detachments, although the C-123 was also used where camp strips were adequate. On 1 January 1967 the CV-2's were placed under USAF control and their designation was changed to C-7A. Subsequently, in the opinion of Special Forces personnel, the utilization of aircraft and the distribution of air cargo proceeded more efficiently than before, mainly because of superior maintenance facilities and a more closely controlled system of scheduling flights and maintenance.

(U) ~~(C)~~ A continuing relative increase in movement of cargo by surface means was clearly evident in the spring of 1967 (see Fig. 16). Additional and improved port facilities, improved security of highways, especially in II CTZ, and the shift to the FSP system permitted more cargo to be shipped and trucked. In II CTZ most of the total cargo was shipped by coastal vessel from Nha Trang

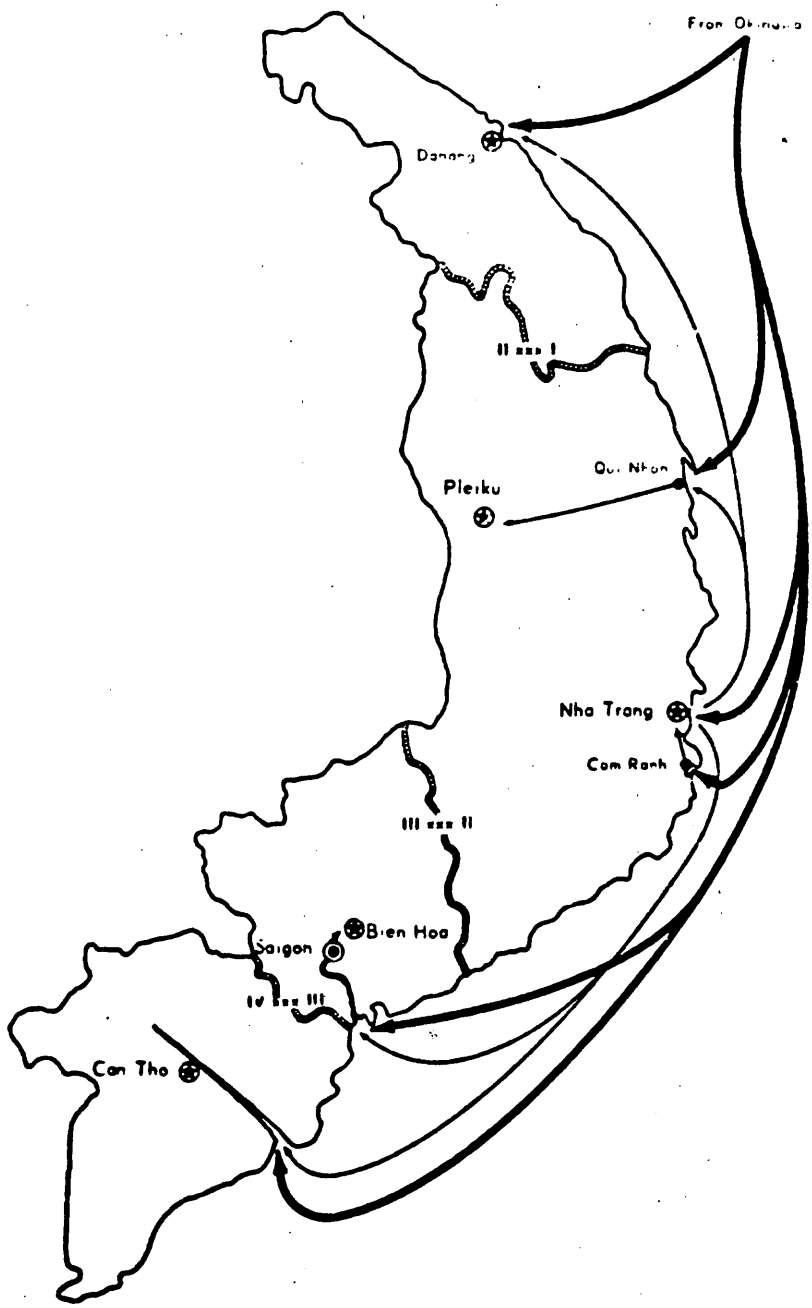

(U) **Fig. 16—Surface Movement of Supplies to FSPs**

FSPs are organic to the letter companies at Danang, Pleiku, Bien Hoa, and Can Tho, which are also the locations of ARVN corps headquarters.

RAC

to Qui Nhon, thence by truck to the FSP at Pleiku. Similarly the FSP for III CTZ at Bien Hoa received a sizable portion of its total cargo through the port of Saigon and overland from there. The FSPs at Danang in I CTZ and Can Tho in IV CTZ also received more of their total cargo by water shipment. In many instances, cargo for the FSPs of I, II, and IV CTZs was shipped directly to them from Okinawa.

In-Country Supply Sources

(U) ~~(C)~~ With the establishment in Vietnam of a major logistical support system for the US tactical units, some of the support for the CIDG program was shifted to US in-country sources. Under the terms of a 1 July 1966 Inter-Service Support Agreement, the 1st LOGCOMD depots in Vietnam became the primary source of ammunition. A more flexible sharing of facilities was introduced whereby supplies and services were obtained from the nearest available source. USASF detachments could obtain many common user items, including POL, from the nearest 1st LOGCOMD depot or other US Army, Navy, Marine, or Air Force supply point. The nominal requirement to cover inter-unit transfers with appropriate documentation and billing was often overlooked in the interest of time and efficiency.

Movement of Incoming Supplies

(U) Cargo inbound from Okinawa or other sources arrived in LSTs and deep-draft vessels at Nha Trang or Cam Ranh Bay and thence were forwarded by truck convoy. Seaborne cargo was sometimes shipped directly to Danang, Qui Nhon (for Pleiku), Saigon (for Bien Hoa), or Can Tho. High-priority air cargo arrived at Nha Trang or Tan Son Nhut Airport in Saigon. On arrival at the LSC at Nha Trang, all the goods were tallied in, posted on stock record cards, and sent to one of the following warehouses:

(a) Medical supplies.
(b) Clothing and individual equipment.
(c) Ordnance, signal, and engineer equipment.
(d) Air items, for rigging and dropping cargo.
(e) Repair parts.
(f) Rations and other consumables.
(g) Ammunition.

Supply Procedures

(U) General Operations. Over the years of USASF's operations in Vietnam, supply procedures that had at first been simple and informal became increasingly systematized. By the middle of 1967 the system functioned as follows: A and B detachments submitted routine, priority, or emergency requisitions to the letter companies using a separate sheet for each major class of supplies. Priority and emergency requisitions were transmitted by radio, the written form following. The logistical support system attempted to fill emergency requisitions in 2 hours, priority in 4 to 7 days, and routine in 14 to 21 days. Priority requisitions were marked with a red ball to ensure priority attention at each step in the FSP or LSC response. If a requisition could be filled at

UNCLASSIFIED

company level by the FSP, action was completed there; if not, the company S4 section made appropriate notations in its records and forwarded the requisition to the LSC at Nha Trang.

(U) Operations at Nha Trang. At the Nha Trang LSC a requisition was first given an LSC voucher number. Next each line item was checked against the stock record cards and marked either "fill" or "due out," depending on whether the item was in stock. At this point a copy of the requisition was mailed back to the requisitioner. The requisition was then broken down into components of sheets listing the same class, which were sent to the appropriate warehouses. At each warehouse the requisitioned supplies were removed from stock, packaged, palletized (for large loads for the same detachment), and put on line for shipment. The bulk of the cargo moved from the LSC was for the big-customer FSPs that required whole pallet loads of the same class of supplies.

(U) The movement section prepared the loads for delivery by air, land, or water; scheduled the movement in accordance with the transport means available; and ensured that the cargo was spotted at the pickup point at the proper time. By the middle of 1967 the volume of supplies moving daily from Nha Trang averaged about 200 tons. The FSP at Pleiku was airlifting about 30 tons a day to the B and A detachments it served.

Emergency Resupply

(U) At the LSC and the FSPs, emergency lots of assorted ammunition, food, water, and medical supplies were kept prerigged for immediate loading aboard the first available aircraft. In good weather during daylight hours it was possible to provide emergency 2-hour delivery service to any point in South Vietnam.

Replenishment of Stocks

(U) At each echelon, from A detachments to the LSC, records were kept on the actual use of the different classes of supplies. A detachments were required to report quantities used and stocks on hand. The LSC maintained such records for the latest 6 months and on this basis estimated actual requirements and arranged automatic periodic resupply of such supplies as rations and POL.

(U) The 6 months' experience tables kept by LSC also formed the basis for revisions in the 60-day stockage list prepared by CISO and revised monthly at a joint LSC-CISO conference. As in the earlier period before 5 SFGA was organized, the replenishment of LSC stocks from Okinawa or elsewhere in the theater or CONUS was accomplished in this sequence: (a) LSC altered the latest revised stockage list to reflect current needs, (b) CISO approved or modified the changes after consultation, and (c) CISO directed shipment of the quantities it had approved from 2d Log Comd's stocks on Okinawa.[23]

Special Operations

(U) The operations of Mobile Guerrilla Forces (MGF) and Mobile Strike (MIKE) Forces and those of Projects Sigma, Omega, and Delta have become increasingly important in the total scope of 5 SFGA activities in Vietnam. The MGF operated away from their bases and normal resupply for periods in ex-

UNCLASSIFIED

UNCLASSIFIED

cess of 30 days. Preplanned resupply airdrops were usually carried out for them at 5-day intervals, subject to rescheduling by radio contact. Prepackaged assortments of food, ammunition, medical supplies, and water were kept available at the FSP that serviced the mobile forces. These prepackaged assortments were easily modified at the radioed request of the column.

(U) After experiencing some losses of supplies and compromise of patrol positions with normal airdrop techniques, the 5 SFGA and the USAF developed the technique of using modified napalm canisters as containers for up to 40 pounds of supplies. They were carried by A-1E aircraft, which made simulated attack runs near the patrol and dropped the canisters from 300 feet at the designated point. This method was generally successful. The use of PSYOP leaflet containers instead of napalm canisters was favored by some supply personnel but in the spring of 1967 the latter seemed to be established as the favored container for the purpose because, although of less capacity, it has greater strength.

Maintenance

(U) The system for maintaining equipment remained much the same as in the earlier period.[23] A detachments were not much burdened with maintenance beyond first echelon. Higher-echelon maintenance was accomplished in two ways: (a) repairs were made on site by visiting teams of Filipino civilian mechanics and electricians under contract to the Eastern Construction Company and attached to the companies in each CTZ, and (b) items of equipment that could not be repaired on site were sent to higher echelons.

(U) Maintenance facilities were established at each B detachment, at each company headquarters, and at the LSC. The B detachments could perform second-echelon and limited third-echelon maintenance. The letter-company S4 sections could provide third-echelon maintenance, and the facilities at the LSC could do up to limited fifth-echelon maintenance. Filipino and locally hired civilians supplemented American personnel at these installations.

Construction

(U) As in the earlier period of USASF's activities in Vietnam, most of the construction carried out at CIDG camps was performed by local labor working under the guidance of 5 SFGA detachments. In the earlier period, technical advice and construction requiring the use of heavy engineering equipment was provided by US Navy Seabee Technical Assistance Teams (STATs), and Army Engineer Control and Advisory Detachments (ECADs) on TDY. During the period covered by this study these were replaced by US Army Engineer KA and KB teams assigned as augmentation to SFGA under the guidance of the senior KA team officer acting as group engineer officer. This engineer augmentation came from the 539th Engr Det on Okinawa, a part of the Special Action Force, Asia (SAF Asia).

(U) Significant innovations in the engineering field were the development of the fighting camp (see Fig. 17) and the floating camp. CIDG camps built in 1967 in I, II, and III CTZs consisted of a series of fortified platoon positions with interlocking communications and overlapping fields of fire. The positioning of wire entanglements, minefields, and heavy weapons was arranged to channel an attacking force into exposed positions and to provide the defensive

UNCLASSIFIED

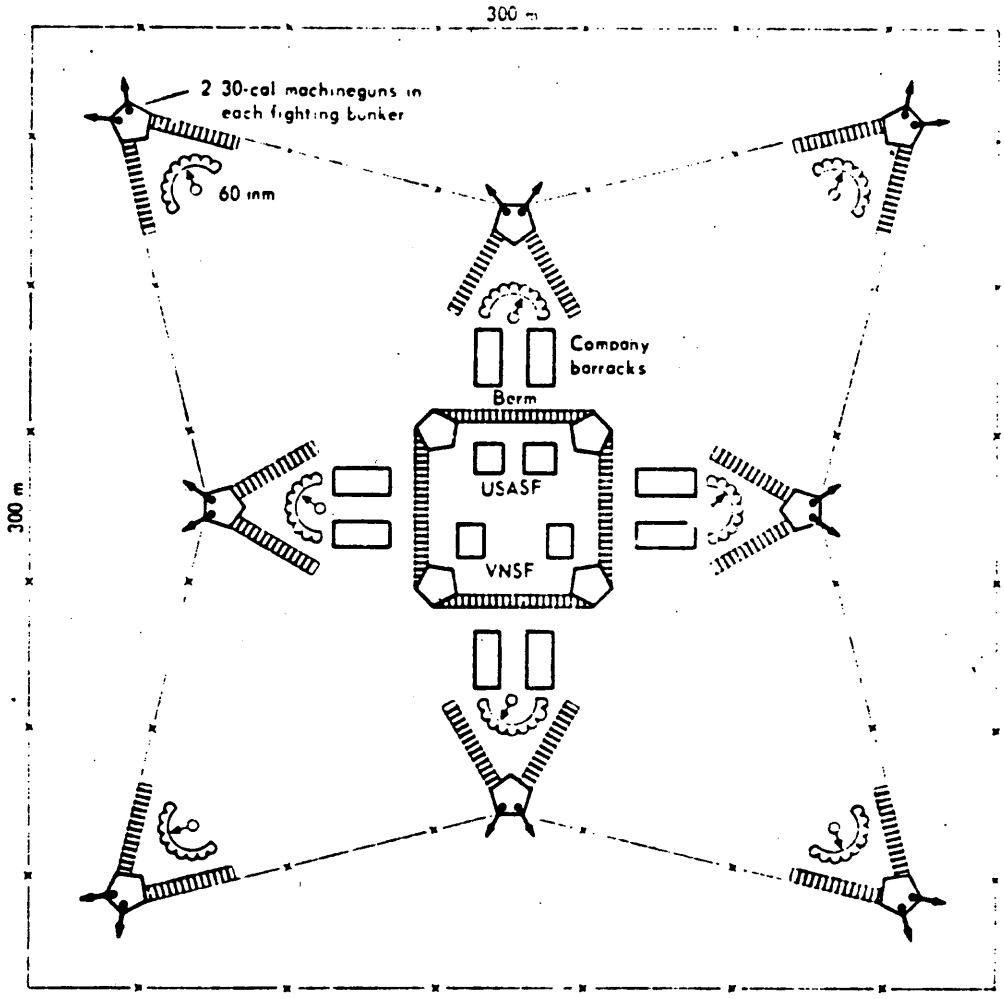

(U) Fig. 17—Trang Phuc Fighting Camp, Ban Don, Darlac Province

positions with maximum mutual support. Decentralization of camp defense was one of the main advantages of the concept, for it denied the enemy any single prize target and provided an effective means for counteraction from several strongpoints simultaneously. It is also believed to have fostered greater resourcefulness and a more aggressive attitude among the VNSF and CIDG and to have helped to dispel the "safety behind the fortress walls" mentality. Having their permanent base camp more closely resemble a forward operating base may also have favored the aggressive patrolling spirit that HQ 5 SFGA was endeavoring to inculcate. Following the introduction of the fighting-camp concept, it was decided to prestock packets of precut lumber hardware, roofing, and fixtures for immediate shipment to a new campsite and to standardize the structures in all new camps.

(U) The floating camp was the 5 SFGA response to the havoc wrought by the severe rains and floods in the Delta in 1966 when five camps were inundated. The floating camp consists of structures built on platforms that rise with the water. These are supported by 55-gallon drums anchored and lashed together. Storage bunkers and crew-served weapons positions are constructed on hardened floating platforms, and there is also a floating helipad.

PROBLEMS

Personnel and Operational Procedures

(U) The opinions of USASF personnel who served in Vietnam during the period were generally favorable with regard to the efficiency of the logistical system. The problems that arose were the minor ones that develop within any logistical system owing to the constraints under which it operates.

(U) In the judgment of experienced career Army supply personnel who have worked in the 5 SFGA logistical support system, a basic difficulty is that many USASF personnel assigned to logistical duties are not Army supply specialists. On the other hand, most Army S4 personnel are initially unfamiliar with Special Forces or the unique features of the Parasol switchback logistics system for support of CIDG.

(U) Difficulties with local civilian personnel arose from their lack of familiarity with modern mechanical and electrical equipment and caused a high rate of turnover due to firings for cause.

(U) Standard US Army materiel occasionally was found to be defective. Among such reports were several instances of breakdowns of 2½-ton 6 × 6 trucks too early in their period of use and of malfunctions of generator sets due to incorrect wiring. These were instances in which either the manufacturer's or the Army's quality-control inspection systems had failed to prevent delivery of defective equipment.

(U) A number of difficulties have been due to the nature of the system, the degree of competence and conscientiousness of the personnel running it, and occasional shortages of personnel or transport support. These are not really problems to be solved but rather the imperfections of operation that beset any system operated by human beings under the stresses of a combat environment. Some examples of minor irritants follow:

(a) Packaged or palletized supplies ready for delivery were sometimes left at the loading ramp because the aircraft was already overloaded. Days or even weeks might pass before the load could be airlifted to the camp that requisitioned it, and by then the contents would have suffered from exposure to the weather.

(b) A detachments constantly reported cases of "streamers," i.e., parachutes that failed to open in supply drops, with resulting loss or damage to the supplies. These failures resulted either from use of old and defective parachutes or from incorrect packing, rigging, or dropping techniques.

(c) Delays occurred both in the pickup of equipment being sent to a higher echelon for repair and in the return of repaired equipment. These shortcomings were attributable to insufficient aircraft, maintenance float stock, and maintenance personnel.

(d) Sometimes an A detachment ordered spare parts for major items of equipment (e.g., generators) and attempted to perform major overhauls on site. These efforts usually failed owing to lack of training and proper tools, and they increased the deadline rate and slowed the requisition and supply process.

Transfers of Equipment and Supplies

(U) The interservice agreement of July 1966 provided alternative sources of supply and introduced a greater degree of flexibility in meeting current needs. Under the terms of the agreement, 5 SFGA was to be billed by the supplying agency (most frequently a 1st Log Comd depot) for equipment or supplies drawn. The 5 SFGA reported, however, that 1st Log Comd had not submitted bills for much of the materiel drawn by USASF detachments. This temporarily complicated 5 SFGA and CISO accounting and budget request procedures because only an incomplete picture of actual consumption was reflected, but it was soon straightened out.

(U) ~~(C)~~ When a Special Forces detachment in a subsector role was advising RF/PF units or when a CIDG strike force was converted to RF, questions arose concerning the proper sources of supply, transfer, or replacement of equipment, and accountability and billing. RF/PF units were supplied through ARVN channels, with support from the US MAP—not through the CIDG system. Actually there was no real question. It happened now and then that, despite the ineligibility of RF for Special Forces supply support, units in dire need of weapons, ammunition, and fortification materials were in fact provided them through the CIDG system.

SUMMARY COMMENT

(U) ~~(S)~~ The CIDG logistical support system as inherited from a US civilian agency and operated by 5 SFGA has been a significant success. It attained the classic stage of maturity that can come only with years of continued operational experience. During FY67 virtually the entire system was overhauled to take the fullest advantage of the expanding logistic support facilities that attended the US buildup. The difficulties that arose were just the minor ones that are solved only to reappear and again be solved. Such excellence in operation, once achieved, is maintained only by unremitting effort in careful planning; working out specific agreements in advance with supporting agencies; close supervision and inspection; adequate storage, transport, and repair facilities; and thoroughly trained personnel in adequate numbers to perform all necessary tasks.

Chapter 10

COMMUNICATIONS

SITUATION IN LATE 1964

(U) A basic feature of Special Forces field operations is the organic communications network directly connecting headquarters and field detachments. A deployed USASF group is independent of Army Signal Corps units and other Army headquarters or field units for the satisfaction of its communications needs.

(U) The principal features of the communications network for USASF/CIDG units as of late 1964 are discussed in the following paragraphs.

A Detachments

(U) At A detachments, short-range two-way voice contact between patrol elements in the field was provided mainly by the commercial model HT-1 handsets. Backpack TR-20's were used at CIDG platoon and company levels and at camp headquarters. These sets were being issued in greater numbers to supplement or replace the AN/PRC-6's and -10's previously used. A significant number of the PRC-10's remained in use.

(U) The AN/GRC-109 was still the standard Special Forces field set for continuous-wave (CW) contacts, not only for patrol elements (in a backpack version) but also as the main CW link between A and B detachments and with group headquarters in Nha Trang, i.e., the Special Forces Operational Base (SFOB).

(U) Voice contact between A and B detachments was achieved by use of the TR-35 sets brought into use from late 1963 onward. Voice contact was ordinarily not possible between A detachments and the SFOB.

(U) Lateral communication between two or more A detachments or with other friendly elements at that level was typically handled with TR-20's or TR-35's for voice contact and with the AN/GRC-109 for CW.

(U) Limited local ground-air communication was achieved by using the Gonsett GA-118 radio set.

B Detachments

(U) At B detachments, the TR-35 was used for voice communication with A detachments and the SFOB. CW contact in both directions was mainly

by AN GRC-109. The AN GRC-26 or -46 was used for radio teletype (RTT) traffic between B detachments and the SFOB. These sets were also used for CW and voice transmission and reception.

Special Forces Operational Base

(U) Special Forces headquarters in Nha Trang used TR-35's for voice traffic with the B detachments; AN GRC-109's for CW; and MRR-8 receivers and MRT-9 transmitters for RTT traffic with B detachments and with HQ MACV. The latter two types of equipment could also be used for CW and voice.

Net Operations

(U) A detachments communicated with their B detachments at least once a day, as did the B detachments with the SFOB. A detachments also communicated directly with the SFOB once a day to transmit their situation reports (SITREPs) and to confirm their capability to establish contact in emergency. Ordinarily the SFOB relayed its messages for A detachments through the appropriate B detachment.

MODIFICATIONS INTRODUCED

(U) With the expansion of the USASF CIDG program in 1965, the takeover of the duties of the four B detachments (one in each CTZ) by C detachments (actually company headquarters), and the increase in the number of A and B detachments, the USASF CIDG communications network underwent significant changes. The introduction of another echelon to the organizational structure and the increase in the volume of traffic brought about a more marked stratification or "echeloning" of networks and daily contacts. Except for emergencies or other special cases, there was less direct contact than formerly between the top and bottom echelons of the command. Practically all traffic was channeled through the normal chain of command, i.e., from A to B to C to SFOB, and vice versa.

Single-Sideband Equipment

(U) ~~(C)~~ The installation of 106 AN/FRC-93 (KWM-2) amplitude-modulated (AM) single-sideband (SSB) sets throughout the 5 SFGA in 1965 gave group headquarters and detachment commanders at all echelons a highly flexible CW and voice command net.[14] The utility of this net was demonstrated during the VC attack on Plei Me in 1965 when the group commander was able to keep in instantaneous telephone contact with the camp.[15] The FRC-93 also gave each detachment a base-station radio that could stay in the command net at all times, freeing the GRC-109 and -87 for tactical missions.

(U) ~~(C)~~ The use of AM SSB equipment was extended to patrols in the field in 1965 with the introduction of 126 PRC-74 portable CW and voice radios. Further improvement of patrol communications was made possible by issuing 159 PRC-64 AM voice and CW sets.[16] These augmented the Special Forces standard field set, the GRC-109. The later partial substitution of the more advanced PRC-25

frequency-modulated (FM) voice radio sets for some of the PRC-10's brought further modernization to the USASF/CIDG field communications system.

Radio Teletype Equipment

(U) Another development accompanying the growth of Special Forces activity in Vietnam in 1965 was the increased use of RTT transmission at all echelons above the A detachments. RTT became and remained the primary traffic artery from the B detachments upward. The AN/GRC-26D was the most widely used set for this purpose. One set at each B detachment and two at each C detachment (company headquarters) was the typical installation. At group headquarters the MRR-8 and MRT-9 continued to be the principal equipment for RTT traffic. They were supplemented as necessary by adding GRC-26D's until, by early 1967, eight of the latter were installed at group headquarters. The use of RTT made possible the handling of a much greater traffic load, as compared with CW. RTT on-line encrypting incorporated in the 26D's further facilitated the processing of the larger volume of traffic caused by the growing pace of CIDG/USASF activities and also provided greater security.[24] The group headquarters signal complex was modified in 1965 to provide a semiautomatic tape relay capability between all stations in the group RTT network and thus further reduce handling time.[15]

Other Modernization

(U) The introduction of high-speed-burst transmitting and receiving equipment in 1967 supplied the potential of increasing the capacity of the network still further and provided greater insurance against possible compromise of security. The new multimode multichannel system, of which the AN/TSC-26 is the principal base-station equipment, was also brought into use in 1967, along with additional communications center teletype equipment.

PERSONNEL

(U) Organic to 5 SFGA, when it deployed to South Vietnam, was a Special Forces signal company of eight officers and 175 enlisted men (TOE 11-247E). It operated the group headquarters communications center and base radio station and the warehouse and maintenance shop and it provided support to the company headquarters and field detachments.

(U) The normal communications personnel strength of one officer and six enlisted men at each company headquarters and five enlisted men at each B detachment was augmented by personnel from the signal company. By early 1967 this augmentation amounted to about 100 persons—13 at each company headquarters and three at each B detachment—to handle the RTT traffic and cryptographic work and to perform on-site maintenance, up to third echelon, on the equipment. The signal company also provided a permanent field maintenance team that moved from company to company performing maintenance and repair work in the detachments.

(U) (C) Two staff signal officers operating out of the group headquarters signal office made periodic visits to company headquarters and field detachments to exercise technical supervisory control. It was planned to have four signal advisory detachments assigned to group headquarters to give further assistance at the company level. Each such detachment would consist of one captain, one E-7, and two E-6's (TOE 500-E (UC)). The US military personnel were augmented by up to 26 Eastern Construction Company and 57 locally hired civilian employees, engaged principally in maintenance work.

SCOPE OF SPECIAL FORCES COMMUNICATIONS

(U) (C) Special Forces' widely scattered operations throughout the RVN required a highly efficient and responsive communications system. The number of personnel directly served by their networks (about 83,000) equaled a large US Army corps. The assignment to US Army units of areas of operations (AO) that included the tactical areas of responsibility (TAORs) of CIDG camps involved CIDG strike forces more and more in joint operations. This together with the creation of the special operations projects (Delta, Sigma, Omega) and the assignment of the sector and subsector mission increased the number of units and headquarters with which communications had to be maintained and added considerably to the message traffic.

(U) (C) In mid-1967 USASF/CIDG units had about 1000 separate radio nets in operation throughout the country. All needed frequency assignments in the 1.5-399.95-MC range, in the AM, SSB, and FM modes, and for CW, voice, and/or RTT transmission and reception over both short and long distances. At the several echelons of the USASF/VNSF organization, various elements needed to communicate with unit headquarters up to corps level of US and other FWMAF, with GVN district and sector headquarters, with operational units and their advisers, and with supporting artillery, helicopters, transport aircraft, and forward air controller (FAC) and fighter aircraft. They had to be able to net with two or more of these simultaneously, to act as relay stations when situations demanded, and to pass message traffic for other units or headquarters. Group Signal Operating Instructions (SOI) and standing signal instructions (SSI) had to be prepared and revised monthly or whenever a probable compromise occurred. The volume of traffic placed a heavy load on available equipment and personnel that created a need for further augmentation, but the 5 SFGA's expanding tactical commitments were not accompanied by corresponding increases in the signal TOE or budget.

FUTURE PLANS

(U) In mid-1967, plans for further improving the USASF/CIDG communications system envisioned reducing the number of different models of radio sets, landwire telephone systems, switchboards, generator sets, batteries, and related equipment in use and standardizing a limited number of the most advanced models.

A Detachments

(U) (S) Nine or 10 models of radio sets would be required at A detachments. For short-range very-high-frequency (VHF) voice contact among patrol elements, their forward base headquarters, and CIDG camp headquarters: the HT-1 or HT-1a and TR-20 for indigenous personnel; the HT-1a, TR-20, and AN/PRC-25 and -70 for US personnel. The HT-1 or -1a would continue as the basic CIDG squad set; the PRC-25 would become the standard platoon set (in American hands), replacing the PRC-10; and the PRC-70 would be the main company headquarters set (in American hands), supplementing the GRC-109 and replacing various other equipment then in use. For short-range FM VHF ground-air voice communication from camp headquarters, the AN/GRC-125 would replace the VRC-10 and VRQ-3. For medium-range voice and CW contact with B detachments, company headquarters, and group headquarters, the AN/FRC-93 (AM SSB), possibly supplemented by the AN/GRC-163 (FM), would provide a secure voice channel.

(U) (S) The PRC-70, a relatively high-powered set with numerous capabilities (AM, SSB, FM, CW, voice, continuous tuning from 2.0 to 75.95 Mc, burst transmission and reception), could be used for several of the purposes just mentioned, as well as for communication with other A detachments and other friendly elements. The quantities of the three principal new models needed by A detachments in the updated system were estimated to be 400 PRC-25's, 300 PRC-70's, and 200 PRC-66's.

B Detachments

(U) (S) Four or five different models of radio sets would be required by B detachments. For medium-range voice and CW contact with A detachments, company headquarters, and group headquarters: the AN/FRC-93 (AM SSB), possibly supplemented by the AN/GRC-163 (FM). The GRC-125's then in service would be continued in use within their limited range, for short-range ground-air communication in FM and VHF and times when the security features of the GRC-163 were not needed. For short-range ultrahigh-frequency (UHF) ground-air voice contact, the AN/PRC-66 (AM) would be used. For RTT traffic to company headquarters, the AN/GRC 26D would be continued in use also for AM voice or CW traffic in the high-frequency (HF) band, until the GRC-108 or -122 become available.

Company Headquarters

(U) (S) Four or five different models of radio sets would be required at each company headquarters. The bulk of the traffic to and through the four company base stations would continue to be RTT, for which two AN/GRC-26D's would continue as the standard installation until the GRC-108 became available. Other equipment would be similar to that used at B detachments.

Group Headquarters

(U) (S) One basic model, the TSC-26, with supplementation was foreseen for the SFOB. The two MRR-8's and two MRT-9's in use in 1967 were considered unsatisfactory to meet current needs, but supplemented by the eight GRC-26D's,

they could handle the main flow of traffic to and from group headquarters, especially the RTT traffic, until the new TSC-26 became fully operational.

(U) ~~(C)~~ Teletype capabilities were to be further improved by the installation of additional AN/FGC-20X teletypewriter (tt) sets, TT-109F/G reperforators, fixed-installation radio control racks, and the necessary equipment for terminating all RTT, landline tt, and Tropo tt circuits. By mid-1967 it was expected that all components of this equipment would be installed throughout the group to provide the optimum in capacity, flexibility, reliability, and security within the limits of the state of the art.

Equipment To Be Replaced

(U) If the modernization of the USASF/CIDG communications system were to proceed as outlined above, the following models of radio sets that had been used for varying periods of time would be replaced: AN/PRC-6, -10, -41, -64, and -74; AN/GRC-9 and -87; AN/VRC-10, -34, and -47; and AN/VRQ-3.

SPECIAL SITUATIONS AND PROBLEMS

Air-Ground Communications

(U) ~~(C)~~ The ability of ground troops to communicate with supporting aircraft, for both combat and logistical support, is limited by the degree of compatibility of their radio equipment. Army aircraft equipped with ARC-44 or -54 FM VHF sets can communicate with ground units using FM VHF sets (e.g., the PRC-10, -25, or -70 or the GRC-125) provided the latter use frequencies within the range of the former (24.0–51.9 Mc for the ARC-44; 30.0–69.95 Mc for the ARC-54). This is a very crowded frequency range, however, necessitating careful preselection of frequency and careful tuning. Air Force aircraft have a variety of AM and FM radio sets, depending on the model of the aircraft and its mission. This equipment is most often incompatible with Army ground radio equipment. Air Force planes equipped only with UHF radios were until recently out of reach of Army field units.

(U) ~~(C)~~ Two solutions to this problem have been tried in Vietnam. One is to install in the aircraft the models of radio receivers and transmitters that can net with those used by the ground units. Attempts to use the PRC-10 in C-123 transport planes have been unsuccessful.[25] ARC-54's, designed for installation in aircraft and having a frequency range almost matching that of the late model PRC-25 and -70 and the GRC-125, have provided the desired capability. The FAC planes of the US Air Force (USAF) when equipped with ARC-54's and the appropriate Air Force UHF AM radios can act as the relay link between ground units and Air Force tactical aircraft.

(U) ~~(C)~~ The other solution is to equip ground units with field radio sets that can communicate directly with aircraft. This has been done by attaching Air Force personnel equipped with such sets (e.g., the AM UHF PRC-41) to ground units or by issuing such sets to ground units. USASF detachments in I CTZ have used PRC-41's on loan from the USAF and the US Marine Corps (USMC). In the other CTZs, another of the aforementioned solutions has been necessary. The issuance of the new PRC-66 UHF AM backpack field set, considerably

lighter and less bulky than the PRC-41, should materially improve the ground-air communications capabilities of USASF units.

Special Operations

(U) ~~(C)~~ Several different types of portable radio sets have been used by the small reconnaissance teams and other elements of special operations units. These have included AM VHF voice sets (e.g., HT-1 and -1a); FM VHF voice equipment (e.g., PRC-10 and -25); AM SSB medium frequency (MF)-HF voice and CW sets (e.g., PRC-64 and -74); and the Special Forces standby, the AM HF CW set, GRC-109, backpack version. Each of these types has its advocates. Among the pros and cons, the following points have been made:

(U) Using voice radio risks revealing the patrol's position. Compromise of message security is also risked. CW is safer though slower, but since 1965 fewer operators have been expert in CW transmission. The new burst-transmission devices that can be fitted to the newer model CW sets may help overcome this weakness and further improve the security advantage of CW.

(U) The dependability of the GRC-109 operating with a hand generator could be a critical factor on a remote-area patrol, as compared with the risks, including battery fading and vulnerability to weather, inherent in using other equipment. That reliability can also be a significant morale factor for isolated patrols.

(U) On the other hand, the more advanced PRC-25, -74, and especially -70 offer one or more alternative advantages, among which are the ability to reach a wider variety of receivers, including aircraft; alternative modes of operation; greater frequency range; burst transmission; and light weight. The new metal-air battery with wettable pads may prove to be an effective answer to the problems of battery weight and fading.

(U) ~~(C)~~ USASF special operations B detachments have been supplied with 5 SFGA-designed air-transportable trailers equipped with the GRC-26D to provide RTT service from forward bases to detachment headquarters. The trailers were fashioned by removing GRC-26D's from group maintenance float stock, a procedure not recommended. It was planned to replace or supplement that equipment with six GRC-122's, one for each of the special operations units.

(U) ~~(C)~~ A base-station complex for Project Delta was installed at group headquarters in 1965 to provide reliable long-distance countrywide communications with deployed teams. This base station was tied to the group communications system and could relay traffic to other group subordinate headquarters or to higher headquarters.[15] In 1967 one of the two new TSC-26's delivered to 5 SFGA was added to the special operations base station.

OTHER PROBLEMS

(U) The volume of traffic grew constantly over the period of this study, and by early 1967 it was considerably overtaxing available facilities and personnel. Much of the traffic was generated by MACV and USARV. Existing circuits were hard pressed to absorb the additional traffic: tt equipment was not expected to hold up without a sufficient maintenance float on hand: additional

tt equipment was needed to terminate and operate RTT circuits and long-line point-to-point troposcatter circuits simultaneously; and additional RTT personnel were needed.

(U) HQ 5 SFGA did not succeed in obtaining approval for all the additional communications personnel requested. It remained to be seen whether the improvement in performance expected of the new materiel and the lighter maintenance load expected from the use of modular replacement components (e.g., in the PRC-66 and -70) would obviate to any significant degree the need for additional personnel.

Materiel

(U) The growth of Special Forces activities, the changes in organization and procedures, and the introduction of new models of equipment combined to create a materiel problem of considerable proportions. In some instances it was impossible to replace all the older equipment on hand with newer models. In other cases detachment commanders and others were allowed to satisfy their individual preferences in choices of new equipment or to retain in use models with which they were familiar or that possessed particular characteristics to their liking. In some A detachments as many as 15 different models of radio sets were in inventory, in addition to telephone equipment, electric generator sets of several different models, and various kinds of dry-cell and wet batteries. It is not hard to believe that such a situation often overtaxed the ability and ingenuity of the two communications sergeants in the detachment. Similar situations existed at some of the B detachments. This state of affairs complicated the netting and frequency-assignment problems, increased the spare-parts-stockage burden, and added to the maintenance load.

(U) In mid-1965 an estimated 4000 signal end-items were on hand for combat communications at the CIDG company level, plus about 1500 end-items organic to the USASF field force structure.[24] In 1966 a systematic survey was made and some reduction in equipment was achieved. By mid-1967, however, the signal company at HQ 5 SFGA was stocking 9000 catalog line items in its warehouse. The addition of the PPS-5 ground radar to the group's inventory and maintenance load would add another 3000 line items to stockage.

(U) One solution to the stockage problem, proposed by group headquarters signal personnel, was to standardize the equipment used at each echelon in the network and to limit the number of separate models in use. The replaceable-module concept, incorporated in the design of the PRC-66 and -70, would be of great advantage in this regard.

(U) Some of the new-model radio sets that were introduced with such high anticipation proved to have faults that considerably limited their usefulness. This was true of the HT-1, AN/PRC-64, and AN/FRC-93, among others, and of the battery packs for some sets. The HT-1, a commercial model, is vulnerable to moisture and rough handling. The AN/PRC-64 has limited geographic range and frequency, as well as crystal difficulties. The AN/FRC-93, also a commercial model, requires a more stable power supply than was available. Modifications, field expedients, shifting to other modes of communication, or replacement with more carefully developed new models solved some such problems and were expected to take care of others.

Personnel

(U) Another attack on current problems is to ensure adequate MOS training or cross-training of all personnel on the models of equipment they will be called on to operate or repair. This should include training in operator maintenance (first echelon) and direct-support maintenance (second echelon). Many of the personnel arriving with communications MOSs for duty in 5 SFGA were unfamiliar with the models of equipment in use or had insufficient ability in CW transmission. It was believed that one reason for the prevalence of this situation was the too-rapid promotion of personnel into MOS levels for which they were not really qualified.

(U) 5 SFGA set up a testing and training program to overcome the personnel training problem. Each new arrival destined for communications duty was tested on his knowledge of current materiel and on his ability in CW. Those found to be inadequately qualified (10 percent failed the CW test) were detained at group headquarters and were given up to 3 weeks' training at the signal company. The average period of training was 10 days.

(U) There was not only a qualitative deficiency in the preassignment preparation of communications personnel but an insufficient number of radio operators as well. At the group communications center, for example, instead of the three 10-man shifts considered necessary, there were available in 1967 only two shifts, one of 8 men and one of 9.

Maintenance

(U) The maintenance section of the group's signal company was authorized 14 US personnel; it had 11 on duty in May 1967. These were supplemented by 10 Filipino civilian employees. Together they performed general-support (third and fourth echelons) and limited depot (fifth echelon) maintenance on equipment sent in from detachments in the field.

(U) Delays in completing repairs were occasioned by lack of some kinds of parts (e.g., those for the HT-1 handsets), delays in pickup and delivery due to the shortage of aircraft, and restrictions on the utilization of available maintenance personnel to work on classified equipment.

(U) The last-mentioned difficulty arose particularly with respect to cryptographic materiel. Personnel were requisitioned and assigned to 5 SFGA by MOS. The MOSs were not specific with regard to the individual models of crypto materiel a man was qualified to repair. But regulations required that crypto repairmen be restricted to work on the particular models on which they had had school training. Therefore a man assigned to 5 SFGA as a crypto repairman might be found after arrival not to be authorized to work on some of the crypto equipment in use and needing repair.

Miscellaneous

(U) Insufficient warehouse space was a lesser difficulty. Maintenance of the PPS-5 antipersonnel radar as an added signal company responsibility was expected to raise to about 12,000 the number of separate catalog line items to be kept in stock.

(U) There was some feeling among group communications personnel that insufficient advance warning or detailed consideration was given to communications needs and feasibilities when new USASF or CIDG operations were planned.

In their view, operations and planning staffs tended to assume too readily that communications would somehow be taken care of, when actually there might be serious problems requiring special planning and arrangements. 5 SFGA's preparation of three special communications trailers equipped with AN/GRC-26D's to provide the special operations B detachments with RTT links to their forward bases was a case in point. That was done by taking the GRC-26D's from the group signal company's maintenance float stock.

(U) Night communications were reported as extremely poor, especially after US or other Free World Military Assistance Forces (FWMAF) units moved into an area. Daytime traffic was too highly concentrated between the hours of 1600 and 1800. To ease this situation, detachments were ordered to send routine messages at other times.

(U) Congestion of antennas was a problem besetting both ends of the USASF network. With so many different modes and frequency ranges in use simultaneously and so many different radio sets in simultaneous operation, both the lower-echelon stations and the group communications center at Nha Trang were faced with the possible need to relocate their radio transmitter and receiver antenna sites. Vulnerability of aerial antennas to hostile attack was partly overcome by burying them underground in plastic hose.

SUMMARY COMMENT

(U) The communications system of 5 SFGA, excellent as it was, suffered from two serious problems. One was the proliferation of different models of equipment on hand. The other was that by the middle of 1967 the volume and variety of traffic handled by 5 SFGA were overloading the capabilities of the available men and materiel. It was hoped that the proposed reequipment program would satisfy the first problem. One solution suggested for the second problem was to assign an Army area signal company to 5 SFGA as further augmentation. It was believed that if additional personnel and equipment were not forthcoming, it would be necessary for 5 SFGA to depend on other US units in Vietnam to meet group communications needs which, as indicated at the beginning of this chapter, would be contrary to normal Special Forces procedure.

(U) Another possible solution would be to subject the communications problem to careful systems analysis to identify just what portions of the total load are strictly a USASF responsibility and what portions ought more properly to be handled by the facilities of Vietnamese or other US units. Such an analysis could lead to a rationalization of USASF's own needs, capabilities, and commitments and to the setting of specific and realizable goals, with a definite personnel and equipment program, to be achieved at a given point in time.

RAC

Chapter 11

MEDICAL ACTIVITIES

MISSIONS

(U) The missions of USASF medical personnel in Vietnam remained much the same during the 1964–1967 period as during 1961–1964. From time to time, new developments altered emphasis on different aspects of the medical program but the essential missions were as follows:

(a) To care for the health of USASF and other US personnel assigned to 5 SFGA.

(b) To advise the VNSF surgeon and lower-echelon VNSF medical personnel on the training of CIDG aidmen, the treatment of CIDG personnel, and other medical and health matters.

(c) To train CIDG aidmen and, so far as time and opportunities permit, train village and hamlet health workers (HHWs).

(d) To treat CIDG and other indigenous military personnel when their own aidmen cannot handle the load.

(e) To treat CIDG dependents and other civilians near USASF detachments.

(f) To conduct medical aid patrols in villages and hamlets in each USASF detachment's TAOR (part of the Medical Civic Action Program (MEDCAP) discussed in Chap. 12).

(g) To participate with other US and Vietnamese medical authorities in exchanging information, controlling disease, and shaping and carrying out medical aid programs of benefit to the counterinsurgency effort.

(U) At A detachment level, these missions were carried out in three spheres of responsibility, viz. (a) on combat and reconnaissance patrols and other military operations, (b) at CIDG camps and adjoining civilian communities, and (c) in outlying villages and hamlets.

NEW DEVELOPMENTS AND EMPHASES

Doing vs Advising

(U) (C) Despite the paramountcy of the advisory mission, it is clear that emphasis gradually shifted from advising the VNSF in their training and treatment functions in the CIDG program to a more direct USASF participation in training and supervising CIDG aidmen and in treating CIDG personnel and civilians. In giving advice and training to Vietnamese personnel, USASF

medical officers and enlisted men tried to achieve and maintain US medical standards while recognizing Vietnamese limitations. Their aim has been to find a workable compromise between the two.

US Army Special Forces Health

(U) The group surgeon and subordinate USASF medical personnel have emphasized preventive medicine. This emphasis has been most instrumental in reducing the incidence of malaria, infectious hepatitis, amebiasis, and fevers of unknown origin that are presumed to be caused by scre[illegible]s and dengue-type infections—the most common diseases of USASF [illegible] Whereas US personnel may be relied on to take the necessa[illegible]ytic pills (e.g., chloroquine and Dapsone) against malaria, they [illegible]bserv[illegible]dly lax in the use of insect repellent on operations.

(U) Minor illnesses and injuries and first aid for serious injuries among USASF personnel are handled by the highly trained USASF medical specialists. Patients suffering serious wounds or other injuries and serious illnesses are immediately and routinely evacuated to the nearest USASF or other US facility for treatment.

CIDG Health

(U) ~~(S)~~ The care of CIDG sick and wounded is properly a matter for VNSF or Vietnamese civilian medical attention, but USASF and other US medical personnel have inescapably become involved. In their judgment the Vietnamese are seldom equal to the task and cannot be relied on to select the wisest approach to medical problems. VNSF attitudes toward sick and wounded CIDG personnel are hardly proper. For these reasons, as well as to improve the ratio of CIDG personnel absent sick to those present for duty, 5 SFGA has been motivated to provide direct medical support to CIDG personnel.

(U) Through formal and informal arrangements, the US 85th Evacuation Hospital at Qui Nhon, the US 8th Field Hospital at Nha Trang, and the Vietnamese provincial hospital at Bien Hoa, whose staff included a US Agency for International Development (USAID) surgical team, all agreed before the end of 1965 to accept CIDG patients. Early in 1966 convalescent wards for CIDG patients were established at each of the four USASF company locations, and arrangements were made for one in the VNSF medical compound in Nha Trang. At the latter facility a 20-bed dispensary and maternity ward for CIDG dependents was opened in June 1966, staffed by both VNSF and USASF personnel. Additional facilities that became available for CIDG patients and dependents during the remainder of 1966 and the first half of 1967 are shown in the accompanying tabulation.

Date	Location	Facility
June 1966	Can Tho	40-bed ward in American-staffed provincial hospital
July 1966	Bien Hoa	80-bed CIDG hospital
August 1966	Pleiku	60-bed CIDG hospital
February 1967	Danang	40-bed CIDG hospital
March 1967	Ban Me Thuot	15-bed CIDG hospital

(U) The only trained personnel available to staff CIDG hospitals on a regular basis have been US medical personnel of the company headquarters. There have not been enough of them, but they have been assisted, particularly in performing surgery, by American military and civilian doctors in nearby US military installations and provincial hospitals. Many of those doctors also participate in the Military Public Health Assistance Program (MILPHAP) in which US Army, Navy, and Air Force medical personnel donate their services to assist with the heavy civilian case loads in Vietnamese provincial hospitals.

(U) Pressure on USASF medical personnel has been heavy, but CIDG sick and wounded are returned to duty much sooner and in better health than formerly. Morale and combat effectiveness have significantly improved. At the Co A CIDG hospital at Bien Hoa, major surgery has been performed on CIDG patients since mid-May 1967, thus reducing the dependence on US military hospitals in the area. It has become in effect a small general hospital.

Emergency Medical Teams

(U) In 1965 two types of emergency medical assistance teams were formed from among the medical personnel at HQ 5 SFGA: (a) the Medical Airborne Rescue Team (MART) of one officer and four NCOs equipped to provide emergency medical care in inaccessible locations as well as to provide for their own security and communications and (b) the Military Airborne Support Team (MAST) of one officer and two NCOs that can be airlifted to a CIDG camp under attack and suffering heavy casualties. Two droppable X-ray machines, one at Pleiku and the other at Danang, were held available for cases where on-the-spot X rays were necessary.

Communicable Disease Control

(U) From 1965 onward the 5 SFGA surgeon was a member of the MACV-USAID Joint Preventive Medicine and Communicable Disease Control Committee. Epidemiological data were collected from A detachments throughout the country and were disseminated to all military and civilian medical agencies in the RVN. The group surgeon's office was the Central Epidemiological Reference Office (CERO) in II CTZ.

(U) Bubonic plague is a recurring menace in Vietnam, particularly in I and II CTZs. Its incidence increases during the early months of the year. Teams of USASF personnel were deployed to help suppress three outbreaks in I CTZ and two in II CTZ by giving immunizations and by demonstrating rodent-control methods. Total immunization of the population was not feasible because of lack of sufficient vaccine and incomplete control of the people.

In-Country Training for US Army Special Forces Personnel

(U) Early in 1966 a program of in-country refresher training for USASF enlisted medical personnel was put into effect. Four three-man teams from the 1st SFGA and the 156th Med Det on Okinawa were attached to 5 SFGA—one team per company—for 6-month TDY to conduct 5-day refresher courses in tropical diseases, sanitation, and civic action medicine. Classes were held at each company headquarters using a separate program of instruction (POI)

for each CTZ, prepared by in-country doctors. One hundred sixty-eight 5 SFGA medical specialists received refresher instruction from the first group of TDY teams. The 5 SFGA medical specialists in turn developed a series of 14-hour refresher cross-training courses for all nonmedical USASF personnel in Vietnam, beginning early in 1966 and continuing thereafter at 6-month intervals.

Training of Civilian Irregular Defense Groups Aidmen and Hamlet Health Workers

(U) After finishing their instruction of USASF personnel, the four TDY medical training teams from Okinawa gave several 2-week basic medical courses for CIDG aidmen. Later they offered a 6-week course for HHWs. Four new two-man teams arrived in September 1966 and stayed until March 1967. Their primary mission was to teach CIDG aidmen and HHWs, but as time allowed they also gave refresher instruction to USASF personnel. A dental-hygienist program for selected CIDG personnel was inaugurated in II CTZ in 1967—in extension of this type of training.

(U) By 31 January 1967 a total of 195 HHWs had graduated from courses at three Special Forces companies, and 58 more were enrolled. No HHW classes were given in II CTZ because of inability to obtain approval from province chiefs. Company B therefore utilized its TDY team to continue training CIDG aidmen. By the end of January 1967 150 CIDG personnel had completed the course.

Other Activities

(U) Early in 1967, group medical officers were adopting the practice of visiting A detachments for several days at a time to relieve the medical NCOs for a short rest and to gain firsthand knowledge of problems at camp and hamlet level. By early 1967 medical supply had been decentralized to the four company headquarters as part of the overall supply system. Lists of critical medical items are now prepared and revised periodically. Quantities on hand in the company headquarters are reported to group headquarters each month and form the basis for reorders from major in-country or external sources. By these means, appropriate levels of supplies are kept readily available but dispersed for safety and speed of delivery.

PROBLEMS AND SPECIAL SITUATIONS

US Personnel

(U) ~~(C)~~ By 1966 the critical shortage of fully trained and experienced USASF medical NCOs was leaving many detachments shorthanded. As a remedial step the group surgeon began to screen carefully each newly arrived medical NCO to determine in which assignment he could best meet 5 SFGA needs.

Civilian Irregular Defense Groups Personnel

(U) Chronic illnesses and permanent disabilities among the CIDG adversely affected the present-for-duty strength as well as the performance of personnel

in their daily tasks and on operations. In some camps malingering to avoid combat and camp duties was common.

(U) Malaria was a serious problem, particularly in II CTZ. Many strains of the disease, some only recently discovered, are resistant to chloroquine. Whereas Dapsone seems to be an effective suppressant for most such strains when taken by Americans, many indigenous troops apparently have an enzyme deficiency (G-6 PD) that causes a reaction. A joint USASF-Walter Reed Institute of Research team was studying this problem in search of a solution. On one special operation, after about 10 days in the field, half of the indigenous personnel were displaying malaria symptoms and were unable to respond to orders. On another, however, where troops took both Dapsone and chloroquine it was reported that malaria was not a problem.

Special Operations

(U) Difficulties other than malaria have affected special-operations units more than camp strike forces. Exhaustion, anxiety, loss of stamina, and digestive disturbances develop and become more aggravated in proportion to the length of the operation. After 30 days of exposure in the field, CIDG troops tire easily, especially because of the high incidence of malaria. Operations of 25 days or more during wet weather or in wet terrain give rise to fungus infections of the feet and other prolonged-immersion problems. Coughing caused by tuberculosis, smoking, or upper respiratory infections due to wet and chilly weather becomes a security hazard. Vitamin deficiencies, abrasions and lacerations, and secondary infections resulting from these and from insect and spider bites or from leeches are other health problems common to special operations.

(U) ~~(C)~~ A particularly difficult problem of a cultural nature has resulted from the refusal of some indigenous personnel to permit caching the dead when patrols are in hazardous situations and must keep moving.

(U) ~~(C)~~ Roadrunner teams on long-range reconnaissance patrols have often sought early evacuation because of sickness. This may be more a problem of leadership than of actual sickness. Use of more highly qualified VNSF NCOs as team leaders was regarded as the solution.

Vietnamese Medical Care and Attitudes

(U) ~~(S)~~ Vietnamese provincial hospitals and other medical care facilities are overcrowded, understaffed, and otherwise inadequate by US standards. Because of this situation and because CIDG personnel are considered military personnel by the civilian community, it is difficult to persuade civilian facilities to accept sick or wounded CIDG patients. The ARVN, on the other hand, consider the CIDG to be nonmilitary. It is therefore equally difficult to place CIDG cases in ARVN hospitals. If they are accepted, the quality of care is usually inferior to that given to ARVN patients. ARVN medical officers, moreover, often take a callous attitude (from an American viewpoint) toward CIDG needs. VNSF officers and NCOs sometimes failed to call for medical aid or helicopter medical evacuation (MEDEVAC) when such action might have saved the life of a wounded CIDG soldier (a reportable incident), but in these respects Vietnamese attitudes toward minority-group Civilian Irregulars have improved considerably since 1964.

(U) (S) Under these circumstances, CIDG sick and wounded have fared badly when made to depend entirely on Vietnamese care. It was mainly for these reasons that USASF-sponsored hospitals were built expressly for the CIDG at each Special Forces company headquarters and at Ban Me Thuot and Nha Trang, and that military medical facilities of the US field forces offered their assistance to 5 SFGA for the care and treatment of wounded CIDG personnel.

Air Evacuation

(U) (S) US air evacuation of CIDG personnel was originally permitted only when the Vietnamese Air Force (VNAF) could not accept the mission. As previously mentioned, Vietnamese officers and NCOs sometimes failed entirely to call for air MEDEVAC when needed to save the life of a wounded irregular. When it was called for, Vietnamese air MEDEVAC was often slow in arriving, if it came at all. Vietnamese pilots in III CTZ invariably took CIDG patients to Cong Hoa civilian hospital in Saigon (a hospital which was always overcrowded) although facilities for CIDG personnel were available at Bien Hoa and the longer journey to Saigon endangered the lives of the patients. With the US troop buildup came a greater availability of US helicopters for the evacuation of casualties. This, together with the new 5 SFGA medical facilities for CIDG personnel, solved the problems of earlier years.

Hamlet Health Worker Training Program

(U) (S) Province chiefs in II CTZ have at best only tolerated programs for the training of Montagnard HHWs. Vietnamese authorities have also consistently failed to allocate funds to pay HHW personnel trained by the CIDG program; however, the fact that the Government of Vietnam (GVN) Ministry of Health budget permits it to hire only 100 new HHWs per year for the whole country is a major constraint. Nevertheless there has been no change in the government's policy of ignoring the credentials of health workers trained by USASF. As of January 1967 none of 195 graduates of USASF classes had been hired by the GVN. Many hamlets have continued to be denied medical care while USASF-trained personnel have remained unemployed and have become disaffected from both the GVN and the USASF. In the spring of 1967 the future of the program was in doubt. There was hope that some of the USASF-trained HHWs might be placed on the Revolutionary Development cadre payroll.

(U) (S) The fundamental problem, of course, is Vietnamese-Montagnard relations. Resentment on the part of some Vietnamese health officials over continued USASF involvement in the health worker program has been noticeable. Some US military participants in the program have also questioned the USASF role, pointing out the availability of ARVN and other Vietnamese training facilities and staff in the Montagnard areas and expressing the opinion that there is really no need for American military teams to undertake what the GVN could do for itself.

SUMMARY COMMENT

(U) The recent activities of USASF medical specialists in camp and on off-site operations remained much the same as in the 1961–1964 period. By

all accounts the care given by American medical personnel to US and indigenous personnel and the prompt air evacuation of casualties by US helicopter units have been outstanding. At company and group headquarters the principal innovation after 1964 was the establishment of hospitals for CIDG personnel staffed by US doctors.

(U) (C) The principal medical lesson derived from recent USASF experience in Vietnam is that when the US undertakes to guide and support a CIDG-type program in an underdeveloped country it must be prepared to give balanced and complete support to all phases without counting on the full participation of indigenous officials. Because CIDG personnel are paramilitary (neither military nor civilian) they have always experienced difficulty in gaining admission to hospitals of the Vietnamese civilian and military medical care systems. Their minority-group status has not helped in either case. Had it not been for direct US initiative on their behalf (e.g., the CIDG hospitals) the effectiveness of camp and MIKE Forces and special operations units might have been seriously reduced.

(U) (C) The corollary to this lesson is that when the US moves to assist an activity already undertaken (however inadequately) by indigenous organizations (e.g., the rural health program) it should ensure that all necessary coordination has first been achieved. The training of HHWs by TDY teams from SAF Asia was only one of a long series of well-intended efforts to improve rural health care in Vietnam. After over 200 HHWs had been trained, the failure of the GVN to employ them because of lack of funds and unwillingness to accept their credentials produced frustration and annoyance on both sides. The program must be considered a largely wasted effort. As such it repeated failures of the 1961–1964 period when equal numbers of HHWs were trained with similar results.

(U) The advisability of using USASF or other SAF enlisted personnel to give refresher training to USASF medical NCOs is also questioned. In the opinion of some personnel who participated in it, such training should be provided only by medical doctors. USASF medical specialists are already highly trained and qualified, and although other medical enlisted personnel can teach them new techniques, they can offer them little in the way of superior knowledge and may constitute an irritant.

Chapter 12

CIVIC ACTION PSYCHOLOGICAL OPERATIONS, AND REVOLUTIONARY DEVELOPMENT SUPPORT

(U) This chapter examines the recent experience of 5 SFGA relative to the implementation of its civic action and psychological operations (CA/PSYOP) missions. To that end the chapter (a) establishes the nature and dimensions of the CA/PSYOP missions assigned to USASF detachments in the RVN and (b) reviews the experience of these detachments since October 1964 with a view to isolating and identifying major human, material, and organizational problems encountered to mid-1967. Possible alternative solutions in terms of the future CA/PSYOP role of USASF are outlined in Chap. 19.

(U) It is recognized that civic action and PSYOP have long been regarded as separate activities, but because of their close interrelation in the field it is preferable to deal with both in the context of a single chapter. As will be seen later, the problems encountered in the implementation of both missions have been basically the same. It is emphasized that the chapter is concerned entirely with an analysis of problems rather than with a recording of accomplishments. The latter, although statistically overwhelming, are considered only in terms of their relevance to the assigned missions and to the requirements of a population embroiled in Phase III insurgency.

THE MISSION

Objectives

(U) Officially the CA/PSYOP mission of 5 SFGA is to train, advise, and assist indigenous counterparts to plan and implement psychological operations and civic action programs. Detachments, whether at the sector (province), subsector (district), or CIDG camp echelon, are responsible for guiding, motivating, and persuading Vietnamese counterparts to undertake programs to gain civilian support for the Government of Vietnam (GVN) and to expand its control.

(U) USASF detachments are also expected to contribute to the overall economic development of their respective operational areas. To that end they are required to concern themselves with both high-impact short-term projects and long-range programs. Wherever possible, programs and projects are to be implemented in such a way as to promote a third objective, viz, to make the GVN system work. In addition to familiarizing themselves with the GVN

RAC

organization. USASF personnel are expected to work closely with their counterparts, motivating the latter to take the initiative and encouraging them to utilize existing governmental capabilities to the fullest. In short, the Special Forces adviser is expected "... to assist and guide his counterpart in developing effective programs which meet the needs of the people, significantly contribute to the nation building program, and reduce the effectiveness of the Viet Cong (VC) and North Vietnamese (NVA) forces."[4]

Content and Magnitude of the Effort

(U) Pursuant to the stated objectives of the CA/PSYOP missions, USASF detachments, together with their indigenous counterparts, have participated in the planning and execution of a wide range of programs. The civic action effort, for example, has been characterized by the initiation of joint programs in health, sanitation, transportation, education, and agricultural development. The PSYOP effort, on the other hand, has been marked by emphasis on the preparation and dissemination of leaflets, bulletins, and newspapers, as well as by the use of airborne loudspeakers and face-to-face contact with inhabitants of local operational areas.

(U) ~~(C)~~ Illustrative of the CA/PSYOP effort and, more particularly, of its magnitude and diversity are the accomplishments recorded in the quarterly operations report covering the period 1 January–30 April 1966. During this period a total of 4261 civic action projects were completed. Included in this number were the following: construction and/or repair of 47 schools, 50 dispensaries, 118 wells, 97 bridges, and 46 roads; the provision of relief supplies to 18,385 refugees; the treatment of 230,497 patients by USASF and hamlet and village health workers trained by the CIDG program; inauguration of a 10-week CA/PSYOP course for CIDG teams at the Montagnard Training Center at Pleiku; and assistance in land-reclamation projects. Simultaneous with these activities a total of 23 million leaflets was prepared and disseminated, as were 185,000 other publications. Arrangements were also completed for the initiation of a 6-week training program for Vietnamese CIDG members of CA/PSYOP teams at the Political Warfare School. Finally, CIDG Motivation Teams were expanded from 40 to 55 cadres, and an information program was initiated involving meetings twice a week between camp commanders and their personnel.

Assumptions

(U) In the context of the war since 1964, the CA/PSYOP mission and programs proceed from the following assumptions: (a) that a purely military response to the communist-sponsored insurgency is both shortsighted and in the end self-defeating; (b) that, given the nature of the conflict, military operations must be coupled with a determined effort to win the hearts and minds of the Vietnamese people; (c) that CA/PSYOP programs are appropriate instruments for accomplishing this objective; (d) that primary responsibility for CA/PSYOP lies with the GVN; and (e) that USASF detachments situated in remote and relatively insecure regions of the RVN are the only American assets in a position to furnish the material and technical assistance essential to the successful implementation of CA/PSYOP programs by the GVN.

Dimensions of the Mission

(U) If mission objectives are examined in the framework of these assumptions, it is apparent that the CA/PSYOP mission of 5 SFGA is two-dimensional. On the one hand, detachment participation in CA/PSYOP programs is closely tied to the long-range task of nation building. It is here that such objectives as making the GVN system work; improving conditions in the various operational areas; and providing guidance, encouragement, and assistance to VNSF counterparts come to the fore. It is here too that the importance attached to self-help, the expectation that underlying attitudinal structures can be altered by a combination of propaganda and environmental change, and the belief that words and deeds can successfully win the hearts and minds of the people find their fullest expression.

(U) (S) On the other hand, both civic action and psychological operations are also expected to contribute to the more immediate goal of winning the war, i.e., inflicting military defeat on the enemy. Although this dimension of the CA/PSYOP mission has received little attention in documents outlining mission responsibilities, in practice the tendency has been to accord military and quasi-military objectives of CA/PSYOP (e.g., the gathering of intelligence, the promotion of camp security, the rallying of defectors, and the improvement of the morale of indigenous military forces) weight equal to, if not greater than, that accorded the specified nation-building functions just mentioned.

(U) (S) Where this has occurred, concepts such as self-help, area development, and Revolutionary Development have received scant attention. Short-range projects designed to yield information, encourage defections, and ensure civilian cooperation in the maintenance of camp security have come to enjoy a higher priority than long-term programs to establish close and enduring ties between the people of South Vietnam and the GVN. Support for CIDG personnel as well as for RF/PF forces and their dependents, recruitment of agent handlers, and the care and feeding of refugees have been substituted for the joint exercise in nation building. The military objective of winning the war has of necessity assumed more importance than the political objective of winning hearts and minds.

Theory vs Practice

(U) The divergence between theory and practice is in part a reflection of the differing perspectives, needs, and responsibilities of the people involved. Directives, handbooks, and manuals prepared at Saigon and Washington levels evidence an awareness and concern for the overall impact of civic action programs and psychological operations on the future development of the RVN. Thus the official emphasis is on nation building or, in current GVN terminology, "Revolutionary Development." Those charged with carrying out the mission at operational levels, on the other hand, are normally preoccupied with the immediate military situation in their assigned areas. Hence the emphasis in practice is on CA/PSYOP as a contribution to the war effort.

(U) The discrepancy between what ought to be and what is, however, is more than simply a function of proximity to the battlefield. The stated mission objectives themselves and the assumptions underlying them are also partly responsible. With respect to the objectives, the problem appears centered in

official emphasis on the linkage between CA/PSYOP and nation building to the exclusion of other considerations. Whether intentional or not, the failure of those who define mission objectives to make them compatible with the operational constraints imposed by the nature of the insurgency has led to what may be described as a sanctioned evasion of irrelevant or impossible goals in response to the dictates of practical military necessity. Assigned a mission that cannot be implemented in the combat environment of Phase III insurgency, detachments in the field have of necessity carried out a mission that has not been assigned.

(U) ~~(S)~~ So far as the assumptions that underly the mission objectives are concerned, there is equally a tendency to ignore the combat environment within which the CA/PSYOP mission must be implemented. The emphasis on "self-help," for example, correctly assumes that an effective governmental structure cannot be imported from outside but must be developed from within. Were the RVN not confronted with an armed insurgency and were USASF units free to devote themselves solely to CA/PSYOP, the relevancy of this assumption could not be doubted. Given the combat environment, however, the emphasis on self-help (constructive action, Vietnamese-initiated and controlled, with the US role limited to guidance and support) is open to question. Frequently associated with incompetent counterparts more interested in their own material well-being than in nation building and charged with responsibility for meeting the military challenge posed by the VC, USASF personnel have sometimes found it difficult to resist the temptation to take charge. Unilateral action born of frustration, military necessity, or lack of cooperation has on more than one occasion been the preferred course of action for US advisers. When the only consideration is national development, delays and apathy can be tolerated, but when the disinterest or incompetence of a counterpart poses a threat to camp security or a hindrance to intelligence collection, self-help understandably loses its appeal.

(U) Generally the same can be said of the assumption that CA/PSYOP are appropriate instruments for establishing close and enduring ties between the people of South Vietnam and the GVN. Leaving aside the questionable contention that underlying attitudinal structures can be positively influenced by a combination of propaganda and "good works," there is the more fundamental question of whether any government can gain and maintain popular support without first ensuring the security of the people. USASF personnel have apparently become increasingly convinced that no amount of movies, pamphlets, plays, hospitals, schools, or new roads can compensate for the inadequate security of the people from the constant threat of VC intimidation and reprisal. With this realization has come a gradual though unofficial reorientation of the CA/PSYOP mission away from nation building and toward the more immediate problem of dealing with the local military threat.

(U) USASF detachments often constitute the only American advisory presence in remote or insecure districts. In such instances the use of USASF personnel to provide guidance and assistance to local GVN officials in the implementation of CA/PSYOP programs is less a matter of choice than necessity, and, when the demands of nation building conflict with operational requirements, it would be unsound if the latter were not accorded priority. Such areas are not ready for nation building until they are rendered relatively secure.

Only civic action projects that contribute directly to the clearing and securing of insecure districts are appropriate during those phases.

Means and Ends

(U) In the final analysis the divergence between the formal CA/PSYOP mission and the programs actually implemented is primarily the result of a genuine and continuing discrepancy between means and ends. Assigned a mission that appears irrelevant in the context of Phase III insurgency and impractical in terms of available human and material resources, detachments in the field have redefined their CA/PSYOP responsibilities to conform better to their needs and capabilities. At the Saigon and Washington levels there exists what may be described as a pro forma commitment to nation building, whereas in the field this is replaced by a commitment to "military civic action."

IMPLEMENTATION OF CIVIC ACTION/PSYCHOLOGICAL OPERATIONS

(U) ~~(C)~~ The gulf separating formal and informal commitment is only part of the problem. Even if it were bridged, USASF personnel would still be confronted (though to a lesser extent than formerly) with such familiar obstacles as incompetent or disinterested counterparts, insufficient resources, and inadequate planning and programming at levels above HQ 5 SFGA. Until the disparity between theory and practice is eliminated, the last two obstacles are not apt to be reduced.

(U) The success or failure of any program is, in large measure, determined by the training, attitudes, and experience of the individuals involved. When the program is CA/PSYOP and when the objectives of that program relate to nation building, the human factor assumes an even greater importance. The transformation of an underdeveloped, agrarian-based society is a complex undertaking, involving not only the disruption of existing socioeconomic patterns but also a gradual transformation of the traditional value system. Even under the best of circumstances the process requires time, patience, resourcefulness, and a thoroughgoing knowledge of the indigenous culture. This is particularly true when those who presume to encourage, motivate, guide, and advise are not themselves members of the society.

Personnel

(U) Ideally, personnel who are expected to implement a program that will contribute to nation building should, by virtue of their training and experience, appreciate the difficulties involved in social engineering and cross-cultural communication. As advisers, they should be capable of gaging not only their own capabilities and limitations but those of their counterparts as well. Their participation in civic action should proceed from a genuine desire to help and should be predicated on a willingness to learn as well as teach. In order to function effectively in an alien culture, they should be able to communicate in the fullest sense and should be prepared to accept the inertia and hostility that frequently accompany change. Nation building is a long-range proposition. Advisers in the field and the planners in higher headquarters who direct their efforts must

recognize that progress will be slow and must be measured not in months but in years.

(U) Considering the need for highly trained personnel and the difficulties involved in meeting that need, one might reasonably assume that either the mission should be redefined to conform more closely to available manpower resources, or, barring that, a maximum effort should be made to provide the requisite number of skilled personnel. This assumes that the mission as defined and the mission as implemented are essentially the same.

(U) The fact is, however, that since 1964 neither the quantity nor the quality of the USASF and Civil Affairs and PSYOP augmentation personnel involved in the implementation of CA/PSYOP has been adequate to the stated objectives of the mission. The introduction of CA/PSYOP augmentation teams in 1965 and again in May 1966 improved the situation somewhat. Yet the problem of understaffed A detachments whose responsibilities far exceed existing manpower remained critical in the spring of 1967. In some cases personnel whose only qualification for CA/PSYOP was their availability had to be charged with directing detachment programs. In other cases personnel with CA/PSYOP training and/or experience had to assume other duties because no one else was available. Where this was the case, programs tended to lack continuity and to be ineffective.

(U) ~~(S)~~ The shortage of trained personnel has not been helped by the practice of using CA/PSYOP as a "cover" for intelligence activities. Proficient as they may be in the performance of their assigned duties, e.g., gathering information, establishing nets, and procuring handlers, the individuals involved have shown little inclination or ability to implement meaningful CA/PSYOP programs. Whatever short-range military value their efforts have had, there is indirect evidence that such a deliberate perversion of the mission has tended to discredit the entire CA/PSYOP program.

(U) ~~(C)~~ Whatever the criteria employed in selecting individuals for CA/PSYOP work, there is reason to believe that some personnel have not been emotionally or attitudinally suited for activities related to nation building generally and CA/PSYOP in particular. Convinced that CA/PSYOP is both a professional dead end and, except as it contributes to the war effort, a waste of time, such individuals tend to ignore CA/PSYOP completely. Part of the difficulty is that other demands on 5 SFGA far exceed available officer and NCO manpower. Whether functioning as sector or subsector advisers, as detachment commanders, or as headquarters staff, USASF officer personnel have acquired so many additional responsibilities that they have little time to supervise CA/PSYOP programs properly or to write detailed progress reports.

Training

(U) If the selection process has had its shortcomings, so too has the training program. It is difficult to separate limitations in individual capabilities from inadequacies in training, but there are strong indications that the implementation of CA/PSYOP programs has been impeded because those implementing them have possessed only a superficial knowledge of Vietnam—its people, culture, mores, history, and language—and an inadequate understanding of the relation between CA/PSYOP and nation building.

(U) Many of the problems encountered in the CA/PSYOP mission stem directly from an inability to communicate, in the fullest sense of that word, with VNSF counterparts. The language barrier is only part of the difficulty. Formal language training in itself cannot compensate for a thorough understanding of the customs, attitudes, values, and taboos of the people who speak the language.

(U) A tendency to define Vietnamese needs in terms of USASF capabilities is reflected in an inadequate understanding of the relation between CA/PSYOP and nation building. Many projects have been initiated without adequate assessment of local needs and capabilities. The overall developmental requirements of an area or the social and economic dislocation engendered by CA/PSYOP programs have at times been ignored by personnel whose criterion for success is the number of projects initiated and completed or the number of leaflets dropped.

Planning

(U) More effective planning and coordination would be possible at group level if reports from the field were less descriptive and more analytical or if more attention were paid to isolating and identifying factors that contribute to the success or failure of individual programs. Less attention should be paid to the number of projects initiated or completed and the number of people served by a given program.

(U) Here lies the importance of establishing effective vertical communication between units in the field and those who bear overall responsibility for guiding, supporting, and planning CA/PSYOP programs and of establishing effective horizontal communications at all levels between counterparts. There has always been an exchange of information, of course, but little meaningful communication, vertical or horizontal, until 1967. USASF personnel engaged in CA/PSYOP dutifully submit facts and figures concerning the progress of what are essentially military civic action programs. In return they are issued handbooks, manuals, and command directives that pertain to nation building. Lacking the human and material resources necessary for the implementation of their mission, detachments in the field have no alternative but to improvise. Many of these problems are insoluble in the short term. Nonetheless, reporting procedures, command directives, and manuals could be revised to provide more practical guidance to men in the field. In the long term the shortage of trained manpower can be overcome only by making a career in the field of CA/PSYOP professionally appealing to young officers.

PROGRAM DIRECTION

(U) Civic action and PSYOP programs expanded with the group. During the first 2 years of the period under study their implementation was largely governed by the common American belief that any and all material improvements in the life of the underprivileged anywhere are clearly good whatever the context and a firm conviction that such actions provoke gratitude and loyalty toward the government that fosters them.

RAC

(U) (C) It must be kept in mind that the civic action and PSYOP programs of 5 SFGA, although countrywide in one sense and of major significance compared with the rest of MACV, were a relatively modest aggregate of small-scale isolated efforts scattered throughout the country when viewed from Saigon in relation to national pacification programs that were mainly the function of civil ministries. US efforts to interest ARVN and the VNSF command in civic action met with the attitude that, since the Vietnamese soldier and his dependents were as much in need of assistance, perhaps more, as comparable elements in the civilian population, whatever efforts the military could make should be directed toward their own.

(U) (C) On reflection, the notion that the well-being and morale of the ARVN soldier should have priority insofar as military civic action was concerned is an understandable attitude on the part of the Vietnamese Joint General Staff (JGS). USASF emphasis, however, was outward—what they and the Vietnamese military could do for the people—rather than inward. The practical result was a virtual unilateral, if impressive, approach to CA/PSYOP on the part of the group, emphasizing military civic action to villagers in the immediate environs of CIDG camps. When the self-help concept met with little response and VNSF counterpart detachments showed little interest, the US detachment went ahead with the projects anyway.

(U) In 1966 some disappointment with results so far achieved began to manifest itself. Central to this was a growing conviction that "give-away" civic actions were unproductive, that the target villages must be involved, and that the advisory effort in these fields should parallel more closely the aims of the VNSF command rather than plunging ahead on its own.

Reassessment

(U) (C) A staff study revealed the shortcomings in USASF-VNSF civic action, troop-motivation indoctrination, and the established media for PSYOP. There was no coherent 5 SFGA plan to provide continuity of effort appropriate to the objectives of the current GVN pacification program (Revolutionary Development). More serious was a structural fault. No indigenous organizational element was included in the CIDG TOE to conduct civic action in hamlets adjacent to the camps, CIDG troop-motivation indoctrination, or PSYOP. Nor were there sufficient USASF and VNSF personnel qualified in CA/PSYOP to supervise such indigenous elements. VNSF counterparts were uninterested in civic action for villagers or CIDG dependents; their interests were in projects that provided direct tangible benefit to VNSF personnel and their families.

(U) (C) The "transfer of loyalty" problem noted in the earlier RAC study (RAC-T-477[2]) was still unsolved. Civic actions, rather than inducing a sense of gratitude toward GVN officials and loyalty to the GVN in the people (especially ethnic minorities), tended simply to increase goodwill toward local US advisers. There was no responsive centrally controlled logistical channel at the source of civic action donations in Saigon.

Reorientation

(U) Corrective measures included development of a joint USASF/VNSF plan to provide an improved capability for the direction of CA/PSYOP in the A

detachments and provision for a CIDG CA/ PSYOP squad in each camp. To lend emphasis to a closer alignment of the CA/ PSYOP effort to the stated objectives of Revolutionary Development, the group S5 section was reorganized on 1 December 1966 with a major as chief and four captains as staff assistants. The section was redesignated the Revolutionary Development Support Activities (RDSA) section. Each of the staff assistants was responsible for one of the four major program functions: CIDG troop motivation, civic action, logistical support, and field training and planning for CA/PSYOP squads. Each company and each B detachment were to be provided with a qualified CA/ PSYOP staff officer. A central CA/ PSYOP supply point and distribution center was established. With respect to PSYOP, closer coordination with the Political Warfare (POLWAR) section of the VNSF command was provided for.

(U) On 1 March 1967 the group's "Campaign Plan for Special Forces Revolutionary Development in Vietnam" [illegible] was published. This was followed by a conference to provide orientation for recently assigned officers, and shortly thereafter the RDSA section conducted short courses for NCOs assigned primary or additional duties in RDSA. On 20 April 1967 the group issued implementing instructions to the Campaign Plan, setting forth the RDSA program in five phases during the remainder of CY67 (Ref 4, p [illegible]).

The Logic of US Army Special Forces Participation in Revolutionary Development

(U) Clearly a real effort was made to expand and realign CA/ PSYOP in keeping with GVN pacification objectives and to integrate it closely with CIDG operations. Many CIDG camps were located in provinces not accorded priority in Revolutionary Development by the GVN. This was logical since the CIDG program is aimed at remote and insecure areas where government control is weak and VC influence strong, where military action is still dominant in the clearing and securing phases before the threshold of the developmental phase is reached. In these early phases of Revolutionary Development in districts too insecure for the deployment of GVN teams it appears the Special Forces RDSA can have the greatest impact. The scope for the potential RDSA effort at any particular camp is broadest when the district in which it is situated is well populated or attracts refugees but does not have national priority or Revolutionary Development teams. This setting constitutes a partial vacuum into which the RDSA effort flows.

Revolutionary Development Support Activity Campaign Plan Implementation

(U) The period under review in this report extends only into the earliest phases (principally devoted to training) of the 5 SFGA RDSA program, but the 5 SFGA Quarterly Command Report for the period ending 31 July 1967[18] gives some indication of accomplishment and trend. It states that the most significant development in RDSA during the quarter resulted from initiating regularly scheduled counterpart meetings between 5 SFGA RDSA/ PSYOP and the VNSF POLWAR section that had "effected a centralized communications channel for coordinated planning, mutual exchange of ideas and eventually a single program designed to accomplish bi-laterally developed objectives."[18]

(U) The first meeting on 12 May 1967 resulted in a VNSF POLWAR officer's and a US PSYOP officer's going on 14 May to Gia Vuc to analyze reasons for a deterioration in troop morale and lack of motivation to conduct combat operations. Their joint problem analysis and recommendations enabled the USASF and VNSF A detachment commanders to take corrective action that ultimately solved the problem.

(U) During this quarter a reevaluation of the structure and capabilities of the CIDG CA/PSYOP squads reflected the desirability of increasing their strength from 12 to 16 with more flexibility in the mix of skills to respond to differing situations in the many CIDG camps.

(U) The major objective of this first meeting was to identify VNSF POLWAR missions, as assigned by the JGS, to enable 5 SFGA RDSA/PSYOP advisers to be properly aligned with their counterparts at all levels. The meeting generated a need for a joint staff study, which was initiated on 1 June 1967, to recommend how a combined RDSA/PSYOP section should be structured to advise the VNSF in the conduct of the GVN POLWAR program.

(U) In June 1967 the RDSA officer of Co C at Danang organized a rice-buying association, a CIDG cooperative supervised by VNSF/USASF to purchase rice in bulk for resale at reasonable prices to CIDG dependents in remote sites. This would protect strike force personnel and their dependents from unscrupulous local merchants and would also discourage pilferage of camp stocks. The program proved successful and was programmed for extension to the other CTZs.

(U) In July the RDSA section of Co A at Bien Hoa with its POLWAR counterparts established a commissary system on a trial basis in three camps where troop morale was declining because of the remote location and unavailability of subsistence commodities and such morale items as beer and cigarettes. Fixed prices were to be determined and transactions closely monitored to preclude profiteering.

(U) Det A-107 at Tra Bong (Quang Ngai Province, I CTZ) was instrumental in starting what could become a flourishing industry. On 16 May 1967 a portable sawmill began operation at the rate of 800 board feet per day with a projected production of 4000. The integrated Tra Bong Sawmill Cooperative was organized at a meeting at district headquarters, with Vietnamese and Montagnards equally represented in its membership of 800, before installation of the mill. Local construction needs, those of other CIDG camps in I CTZ, and a ready demand in the province capital ensured a market if the product could be transported there. Local timber resources ensured 10 years of operation without hauling. The propaganda theme tied to this enterprise was "The good life under GVN as opposed to death with the Viet Cong."

(U) This was a rare example of nation building, but it may have been attempted in too insecure an environment. Quang Ngai Province was not pacified to any significant degree. The CIDG strike force and elements of the 25th and 101st Abn Divs were conducting intensive combat operations in the area. Airfreight on a space-available basis in USAF transports that stopped at Tra Bong offered the only means of moving the lumber to market.

(U) ~~(S)~~ In June 1967 the new commander of 5 SFGA initiated an extensive evaluation of Revolutionary Development and civic action programs. The final paragraph of that portion of the basic report dealing with RDSA states: "It is

expected that this study will, among other things, result in closer integration of civic action and intelligence efforts. . . ."[18]

Organizational Requisites

(U) To the extent that the CA/PSYOP mission of 5 SFGA imposed an obligation on the group to support nation building, it also imposed exacting standards in the realm of organizational capabilities. When, however, the CONUS resource base was unable to provide 5 SFGA with expertly qualified manpower to accomplish the mission, no amount of careful staff planning, effective coordination, and close supervision of programs in-country could overcome the deficiency.

(U) Despite efforts to upgrade the coordination of unit CA/PSYOP programs and to institute improved reporting procedures, it is inescapable that for the time frame considered here, the CA/PSYOP effort of 5 SFGA reflected considerable disparity in the scope, emphasis, and effectiveness of detachment programs. Such disparity was a direct function of the qualifications of the personnel available to perform the mission.

Materiel Support

(U) In addition to an adequate number of highly trained personnel and a supporting organ' ional structure, nation building requires quantities of material and equipment. National development, unlike military civic action, is a long-range proposition; moreover, since economic development can be expected to engender demands for more sophisticated equipment, it is essential to stockpile and distribute materiel to support both. Nation building also presumes the orderly and phased development of the country with an emphasis on the expansion of indigenous rather than foreign capabilities. The quality and quantity of material and equipment must therefore be carefully regulated to ensure balanced growth and a minimum dependence on external skills and resources.

(U) If USASF A detachments have lacked the personnel and organizational support necessary for the effective implementation of the CA/PSYOP mission, their position with respect to material and equipment has often been little better. The difficulties are an inevitable consequence of the insurgency environment. Where lines of communication and arteries of transportation are subject to frequent disruption, delays in delivery and resultant shortages of equipment and material must be expected. The situation is further complicated by the limited security and availability of surface transportation facilities and by the fact that the majority of USASF detachments are situated in areas that can be reached only by air. Air facilities, already straining under the burden of moving men and material to and from the field, are frequently unable to allocate cargo space to the implements of nation building. Material and equipment for the support of civic action programs and psychological operations are also frequently diverted to other uses. For example, helicopters that are essential for leaflet drops or propaganda broadcasts are often too busy supporting ground operations to be spared for the "other war."

(U) Refugee support has posed serious problems, particularly in I, II, and III CTZs. With the intensification of the conflict in 1965 came sudden

influxes of men, women, and children into the areas of CIDG camps, disrupting community life and placing impossible burdens on the limited CA/PSYOP resources immediately available. On occasion, wood, cement, lumber, and electrical wiring originally intended for the construction of schools, hospitals, or improved housing for CIDG and RF/PF dependents had to be used to build refugee centers. Aside from resentment and hostility engendered among local residents, there was the disappointment and disillusionment of the refugees who, having fled their villages in hope of a better life, found themselves confined to camps with living conditions primitive even by Vietnamese standards. Against this background the most carefully conceived PSYOP and civic action programs in support of area development were bound to be seriously impaired.

(U) Improved Procedures. Substantial improvements in supplying equipment and material for CA/PSYOP were made in early 1967. The establishment of a civic action logistical center at Camp Goodman, Saigon; the construction of individual company warehouses for stocking civic action items; the greater use of 1st Log Comd facilities; the expansion of Air America service; and the feasibility of wider use of the surface transportation network were some of the factors contributing to a greater availability and more rapid delivery of material and equipment. Improved coordination between 5 SFGA and various governmental and private agencies concerned with civic action (e.g., USAID, Joint US Public Affairs Office (JUSPAO), International Voluntary Services, Inc. (IVS), Cooperative for American Relief Everywhere (CARE) also developed after the RDSA conference at Camp Goodman in March 1967. The establishment of committees to conduct Revolutionary Development support surveys at sector and subsector level and the initiation of the program to familiarize group NCOs with the procedural techniques of implementing civic action projects reduced wastage and duplication and ensured a more efficient utilization of material and equipment.

(U) Despite these and other improvements it is clear that just as the personnel problem is partly related to inadequacies in the existing CONUS organizational support for CA/PSYOP, so the supply problem is also partly related to shortcomings in the qualifications of CA/PSYOP personnel and the limited capabilities of these same organizational arrangements. CA/PSYOP personnel who are either emotionally or intellectually unprepared to cope with the complexities of nation building and as a consequence either ignore CA/PSYOP altogether or devote themselves exclusively to meaningless programs and projects will inevitably request material and equipment inappropriate to the effective implementation of mission objectives.

(U) Medical Civic Action. Medical civic action illustrates the nature of the problem. It is one of the most popular programs on a national scale in which the group participates. The medical civic action program (MEDCAP) expanded with the creation of the Military Public Health Assistance Program (MILPHAP) to rural areas. In order to keep pace with the growing demand for medical equipment and drugs—as well as with the materiel requirements of other civic action programs—improvements such as those mentioned earlier were instituted in the medical supply system. As a result the people of South Vietnam are today enjoying the "benefits" of modern medicine more than ever before.

(U) Although well-intentioned, this effort may have undesirable results such as may result from the widespread use of antibiotics. The introduction of "wonder drugs" into an area tends to break down natural immunities in the people and in time creates a need for more sophisticated medicines, e.g., terramycin, streptomycin. This eventuality is acceptable only if antibiotics continue to be available at prices the Vietnamese peasant can afford. There is little prospect at present, however, that the GVN will be able to offer comparable services in this or other areas of preventive medicine after American withdrawal. The raising of expectations without at the same time raising indigenous capabilities places the GVN in the unenviable position of either accepting a prolonged dependency relation with the US or, failing that, of rejecting what have become legitimate popular demands for such goods and services. In either case, the cause of nation building is bound to suffer.

(U) Antibiotics constitute only one illustration. The same point can be made with respect to other civic action programs or psychological operations implemented by USASF detachments and their VNSF counterparts. The essential point is that improving the supply system without at the same time eliminating human and organizational shortcomings merely serves to increase the scope of the damage that may be done by inexperienced personnel who are further stimulated thereby to undertake programs or support poorly conceived indigenous projects. More paper, expanded printing facilities, and a better delivery system may only ensure that propaganda messages that should never have been written receive even wider distribution. Similarly an increased supply of building materials guarantees that facilities better left unbuilt are constructed. Until fundamental changes are made in personnel training and assignment and in program organization, improving the supply system will only reinforce the tendency to define Vietnamese needs in terms of US capabilities.

SUMMARY COMMENT

(U) A real effort was made by 5 SFGA to restructure its CA/PSYOP organization and to realign the program in consonance with the aims of the US-advised GVN pacification program and the directives of the JGS to the VNSF command. The study group can find no fault with the RDSA Campaign Plan.[26] Yet its direction and emphasis seem to bear out the finding that a differential exists between the concept of CA/PSYOP at Saigon and Washington levels as a contribution to nation building and the understanding and actual practice in the 5 SFGA that necessarily reorient these activities to the operational task of defeating the enemy. Except for the sawmill, the CA/PSYOP activities highlighted in the 31 July 1967 Quarterly Report [18] appear to contribute directly or indirectly to combat effectiveness rather than nation building. A barely observable trend began to set in during the last months of the period under review, a trend probably influenced by the closer relation of the RDSA/PSYOP section of 5 SFGA and the POLWAR section of the VNSF command. Military civic action within the CIDG organization and for the benefit of CIDG dependents was emphasized as never before.

(U) Winning the hearts and minds requires definition in the counter-insurgency context. It involves considerably more than gaining a permissive

reasonably loyal attitude on the part of the people toward their government. There is a sine qua non. The people must demonstrate their loyalty by informing on the identity and activities of guerrillas and the subversive infrastructure. When they begin to break silence it is a sure sign that the battle for the hearts and minds is progressing favorably, i.e., that security is being provided and the people are convinced that the government can and will continue to provide it.

(U) CA/PSYOP has clearly been unsuccessful in Vietnam in winning hearts and minds. US Army PSYOP officers and NCOs are insufficiently trained for the task in Vietnam. Their basic training and background are deficient in anthropology, knowledge of Vietnamese culture, and ability to speak the language. It is difficult, to put it mildly, to conduct PSYOP among people with whom you cannot communicate. The effort has been shallow and pro forma. The first image that comes to mind when PSYOP is mentioned is of a chap dropping leaflets from a small aircraft. This general criticism is applicable to the US effort as a whole.

Chapter 13

CONVERSION AND TURNOVER

DEFINITIONS AND CONCEPT

(U) ~~(S)~~ Throughout the history of the CIDG program, the terms "conversion" and "turnover" have been used interchangeably. Although used synonymously, they are distinct. Conversion occurs only in conjunction with turnover and involves the transfer of CIDG personnel and units from the CIDG program to another, invariably the RF/PF, program. It is the indigenous assets that are converted. Turnover is the process by which responsibility for the administration of units and facilities created through the CIDG program with US advice and assistance becomes vested in the Vietnamese government. Troops and camps may be turned over to counterpart VNSF even though remaining in the CIDG program (5 SFGA continues to provide financial and logistic support) or may be turned over to province and district authorities and converted to RF/PF.

(U) From 1963 to early 1967 the general concept was that as CIDG units completed their primary missions and their tactical areas of operational responsibility (TAORs) became relatively secure, they would be converted into RF/PF units to perform missions related to the securing phase of pacification. Conversion and turnover were expected to progress as rapidly as feasible depending on several factors: (a) the degree of security achieved in the TAOR, (b) the compatibility of the CIDG and RF missions and capabilities, (c) the readiness of sector and subsector officials to assume control and to provide the necessary logistical and administrative support, and (d) the willingness of CIDG personnel to enlist in the RF/PF under ARVN control. Another aspect of the concept was that, by relieving the USASF A detachments and their VNSF counterparts from further responsibility for the CIDG units they had brought to an adequate state of performance, the teams could be reassigned to less secure areas to establish new camps. Thus conversion and turnover would both extend normal Government of Vietnam (GVN) sovereignty and permit a continuing extension of the CIDG program into new territory (Ref 2, Chap. 20; Refs 27, 28).

EARLY ATTEMPTS AT CONVERSION AND TURNOVER

(U) ~~(C)~~ The Buon Enao experiment in 1961-1962 was the most successful effort in area development and control in the history of US involvement in the

Vietnam conflict. It progressed rapidly when word spread among the Montagnards of Darlac Province that they would be armed and trained if they declared for the GVN and defended their villages against the VC. The attempted turnover of the Buon Enao self-defense complex to GVN control beginning in 1963, however, was a series of delays and failures that culminated in the Montagnard revolt just before 5 SFGA took over. The reasons for this failure were analyzed in RAC-T-477.[2] They may be briefly summarized here as: mutual suspicion and hostility between the Rhade tribesmen and Vietnamese province and district officials; overly generous distribution by US agencies of weapons and ammunition to tribesmen whose reaction to the GVN-enforced repossession of some of the weapons was understandably negative; apparent disregard on the part of the GVN for the interests, desires, and sensitivities of the Montagnards; inadequate GVN administrative and logistical support; and, significantly, failure of US authorities to appreciate these difficulties and to plan to avoid them.

Formalized Procedures

(U) Despite the failure of the experiment in Darlac Province and other early attempts at turnover, the USASF continued optimistic about this theoretically sound and desirable approach to enlarging the area of GVN control.

(U) (C) The Montagnard revolt caused a reassessment of conversion and turnover procedures. A 5 SFGA memorandum[27] of October 1964 directed that CIDG personnel were to be psychologically prepared for turnover from the time of opening a new camp and specified the steps to be taken in sequence to accomplish turnover:

(1) Submission of Initial CIDG Status Report by the A detachment after coordination with camp commander, village chiefs, sector and subsector commanders, USOM representative, MACV sector and subsector advisors, USASF and VNSF control echelons, and the Corps Senior Advisor.

(2) Hqs USMACV and 5 SFGA approval to start turnover procedures with tentative date.

(3) USASF and VNSF detachment commanders assist sector commander in revising sector defense plan to include CIDG camp and TAOR.

(4) Approval and modification of plan.

(5) Joint inventory of all property to be turned over with receipts in Vietnamese and English, copies attached to Final Status Report. Property turned over to be the minimum essential to orderly transfer and continued successful operation. CIDG units remaining at site or released to sector commander to be fully equipped. Equipment peculiar to USASF TOE and other sensitive critical items to be removed with outgoing detachment.

(6) Final Status Report to be submitted when turnover date is set, signed by VNSF and USASF detachment commanders and sector representative responsible for assuming control.

(7) Turnover ceremony.

(8) Turnover Completion Report with Release from Responsibility for Camp Defense signed by Sector Chief attached.

(U) (C) Other memorandums, directives, and reports on the subject issued late in 1964 and early in 1965 indicate that at first the ultimate goal was to convert all CIDG units and camps. It was emphasized that this would be done in company units, i.e., not necessarily a whole camp strike force at one time. A preparatory step was to reduce the strength of a CIDG company from 150 to 132,

to correspond to the strength of an RF company. A target was set to convert 40 CIDG companies by the end of CY66.[15,24,28-30]

Further Criteria

(U) Early in 1965, during the tenure of command of COL John Spears, the area development mission was emphasized and all CIDG camps were categorized as to pacification phase—clearing, developing, securing. This related progress in CIDG mission accomplishment to GVN criteria for the progressive steps in the pacification process and served to identify and project the proper time for conversion and turnover.

(U) The compatibility of RF and CIDG missions in each phase was examined at specific sites to determine which CIDG camps were performing missions within the capabilities of RF. Border surveillance and the rather too ambitious (at that time) penetration of war zones and secret VC bases were obviously not compatible with normal RF pacification activities. Under the May 1965 mission assignment concepts, only those camps with a solely area development mission could be converted and not until the local area was clearly in the securing phase.

(U) ~~(C)~~ Other factors to be reconciled when considering conversion included the beneficial effect on the CIDG budget and the adverse effect on the RF budget, the ethnic and religious composition of the units and local population, and the willingness of province and district officials to support the units.[28]

Turnovers Accomplished

(U) ~~(C)~~ Available information indicates that approximately 12 camps, presumably including the full CIDG complement, were turned over in the 1965–1966 period. They included Tuc Trong, Da Pau, Djirai, Prey Shrung, Bu Ghia, Binh Khe, Buon Ea Yang, Plei Do Lim, and An Phu. All but the last three were unsuccessful, in most cases because the CIDG personnel, not wishing to contract to serve in a regular force, quit the program.[30] The turnover at An Phu went smoothly, in part because the USASF A detachment there was also assigned the coequal subsector advisory mission. The detachment at An Phu had been the first to assume the dual role.[31]

Reconversions

(U) Available records indicate that before 1967 there were about as many cases of reverse conversion and turnover, i.e., from RF/PF to CIDG and from sector to VNSF/USASF control as there were normal conversions. These were instances of "reconversion" or "turnback" of CIDG assets that had been converted to RF/PF. This was quite apart from the turnovers by USASF detachments in the subsector advisory role to MACV subsector advisory teams, and vice versa, which did not affect the conversion of CIDG personnel. These setbacks from the intended course of events resulted from various unforeseen obstacles.

Problems, Difficulties, and Limitations

(U) ~~(C)~~ The difficulties encountered in effectively implementing conversion and turnover were principally psychological and administrative. Many CIDG

personnel refused to enlist in the RF/PF. Others were persuaded to enlist but then deserted. In some instances whole units accepted conversion but shortly thereafter left their RF post to rejoin their former USASF advisory detachment at its new location. The reasons for the CIDG unwillingness to become and remain RF/PF included distrust of ARVN officers, unwillingness to enlist in a regular force, doubt that they would be properly treated, ethnic or religious differences between the CIDG personnel and other local RF/PF assets, reluctance to serve away from home villages, and dissatisfaction with adjustments in rank imposed at the time of conversion.[21, 90, 92]

(U) ~~(S)~~ The main administrative weaknesses (which USASF and MACV did not sufficiently appreciate) were the unreadiness of sector/subsector headquarters to cope with the additional responsibility and the inability of the RF Administration and Direct Support Logistics (A&DSL) companies to provide the necessary support. Lack of an adequate capability for financial, administrative, or logistical support has invariably been the reason for postponing conversion and turnover, or for reverse conversion. In this regard it must be recognized that conversion and turnovers are not entirely a local problem; the overall ceiling on RF/PF strength and budget is a serious constraint.[21, 90, 92]

(U) ~~(S)~~ In late 1966 and early 1967 the development of a new strategic concept for employment of CIDG units envisaged the establishment of two roughly parallel north-south chains of CIDG camps: one close to the border from which CIDG units would be used (in conjunction with other units) in border-control operations; the other roughly along the country's midline from which interdictory and harassing operations against the VC in-country movement could be conducted. Such operations, as was recognized in 1965, were definitely not within the scope of normal RF/PF capability, hence conversion was virtually ruled out in many border and highland camps. However, as CIDG camps in the lowlands completed their area development missions, conversion to RF/PF and turnover to sector control was appropriate, particularly when the USASF detachments were needed to open new camps under the new strategic concept.

THE CONCEPT IN 1967

(U) Since 1964 the VNSF have gained added proficiency and experience. By early 1967 some VNSF camp commanders and detachments were definitely competent to administer the CIDG program without on-site USASF guidance. In such situations, and if conversion and turnover were unwarranted under the new strategic plan, it was obviously desirable to retain the strike force units in the CIDG program under the sole command of the VNSF A detachment. USASF B and C detachments could continue to provide administrative and logistical support and fairly close monitoring. The new concept offered great opportunity to conserve USASF strength and to foster the assumption of program-management responsibility by the VNSF command.

(U) The procedures established to implement the revised concept were much the same as in the case of conversion and turnover to sector/subsector authority. Parallel requests were submitted by the VNSF command to JGS J3 and by HQ 5 SFGA to MACV J3. On approval of the request, USASF company and counterpart VNSF C detachments were directed to act in a time frame of 30 to 60 days to completion date.[92]

(U) ~~(S)~~ The revised concept also held that, following turnover, the USASF B detachment would remain responsible for providing logistic support, for monitoring the use of US-supplied equipment and funds, and for preparing operational reports. It would be accountable for CIDG funds advanced to the VNSF on interim receipts for cash vouchers and would prepare monthly payrolls. Within 15 days after turnover B detachments would submit final reports covering all aspects of the preparations for turnover and its accomplishment, problems encountered, and recommendations.[32]

Pilot Project

(U) The first experiment in withdrawing a US A detachment and turning a CIDG camp over to VNSF management took place at Plei Mrong in II CTZ. The plan was announced about 1 March 1967. Indoctrination of VNSF detachments and joint planning began immediately at camp B and C detachment levels. The phase-out of the USASF A detachment was scheduled for the period 1-30 April 1967. Principal attention in preparation of the VNSF team was devoted to the supply and medical services, areas in which they had had little previous responsibility and acquaintance with the paper work and accountability. On 15 April the USASF executive officer, team sergeant, intelligence sergeant, and engineer sergeant (half the eight-man detachment) were withdrawn. The remainder of the team completed the turnover and departed on 30 April. The USASF continued to provide normal support.

(U) Only two departures from normal CIDG camp procedures were necessary; both involved the language problem. Supply requisitions were prepared first in Vietnamese and then forwarded to the VNSF B detachment for translation into English before being submitted to the USASF B detachment. One or more well-qualified interpreters had to be constantly available (perhaps one with the ground unit and one with the FAC) when there was a possibility of receiving a call for tactical air support or artillery support, since calls for air strikes and artillery fire were normally handled only by Americans and in English.[33] As of June 1967 the Plei Mrong turnover was judged a success, and 5 SFGA and the VNSF high command began to schedule other camps for turnover. Vinh Gia in IV CTZ was similarly turned over to VNSF management on 1 July 1967.

SUMMARY COMMENT

(U) The concept of conversion and turnover is sound, and every instance of its lasting achievement in practice is evidence of progress in the counterinsurgency effort in Vietnam. Through progressive application of the concept, optimum utilization of scarce and highly skilled assets (i.e., the USASF A detachments) can be achieved, and additional populated areas can be brought under "normal" GVN control. It is apparent, however, that realization of the concept over the years has fallen short of US intentions and expectations.

(U) Optimism is a useful and constructive trait: the repeated evidences of it among USASF personnel in Vietnam reflect the short-tour phenomenon and the lack of experience with Vietnamese and with their problems that were the failing of most successive US incumbents to any given advisory position.

A more thorough acquaintance with actual conditions and a more realistic appraisal of the capabilities and motivations of Vietnamese counterparts might have spared many Americans the experience of seeing carefully planned programs fall short in spite of the goodwill and effort that went into trying to implement them.

PART II

US Army Special Forces Operations and Activities in Thailand, 1962-1967

RAC

Chapter 14

INTRODUCTION TO PART II

(U) Part II is concerned almost entirely with the reconstruction and analysis of the operational experience of US Army Special Forces (USASF) assigned to advise and assist in the internal defense training of units of the Royal Thai Army (RTA) and the Thai National Police (TNP). This constitutes a significant portion of the overall training effort of the Army element of the Joint United States Military Advisory Group (JUSMAG), Thailand, but a relatively minor portion of its advisory effort to the RTA, most of which has been directed toward the reorganization, equipping, and training of the RTA as a conventional force to defend against overt aggression.

(U) The USASF experience, however, can only be considered within the context of the whole US advisory effort in Thailand and the Thai politico-military control structure for counterinsurgency and the assets at its disposal. It is therefore necessary to review the threat in relation to the environment (Chap. 15), the assets available to meet the threat (Chap. 16), and Thai organization and programs for counterinsurgency and counterinsurgency operations (Chap. 17) before addressing USASF training operations as a specific part of the JUSMAG advisory effort (Chap. 18). No attempt is made in Chaps. 15 to 17 to present the subject matter in detail. Their purpose is only to describe the environment of counterinsurgency in Thailand as the setting of the US advisory effort. Problems that have arisen and some of the techniques used in solving them are discussed in Chap. 19.

UNCLASSIFIED

Chapter 15

THE COUNTRY, THE PEOPLE, AND THE THREAT

(U) (C) The Kingdom of Thailand is about three-fourths the size of Texas, with a rapidly increasing population estimated in 1967 to be 30 million. Bangkok is a modern metropolis, one of the great capitals of the world, but since the other cities of importance are small and provincial in character, the population is predominantly rural and devoted to agriculture. The form of government is supposedly a constitutional monarchy, but no constitution was in effect at the time of this study and the democratic process was suspended while a military oligarchy, dating from the coup in 1958 that brought the late Field Marshal Sarit to power, continued to rule.

(U) (C) The attitude of most of the people except the non-Thai minorities is one of tolerance and respect toward the government and veneration toward the crown. Recurring annual increases in gross national product reflect the success of US economic assistance. US military assistance has been on a significant scale. Since the Royal Thai Government (RTG) has to consider the defense of its territory against the threat of external attack, it is not surprising that the armed forces have developed along conventional lines and that until recently almost all training was of the conventional rather than the counterguerrilla type.

REGIONS AND PEOPLE

(U) Thailand may be divided geographically and ethnically into four regions: the Central Basin, the Northeast, the North, and the Peninsula (also referred to as "the South"). The population is 94 percent Thai, of two main types: (a) the Southern, or Siamese, who live in the Central Basin and the North and (b) the Northern, or Lao Thai, who inhabit the Northeast Region. The other 6 percent are chiefly overseas Chinese, who have gravitated to the cities, and Malays of the southern provinces of the Peninsula. There are also upward of 200,000 hill people who dwell in the mountainous areas of the North and 40,000 displaced Vietnamese in the Northeast. Two and possibly three of these regions are threatened with insurgencies.

(U) (S) Little is known of the extent or success of the attempted subversion of the Hill Tribes in the remote areas of the Northern Region except that slender but persistent evidence of such activity, emanating from China through Burma and Laos, goes back several years. In the Northeast Region, however,

UNCLASSIFIED

where dissidence (not necessarily communist) has persisted for several decades, insurgency has progressed to the threshold of Phase II, whereas in the South the Communist Terrorists (CTs)* who settled in the border provinces of Thailand after the failure of their movement in Malaysia have quietly been building a popular base without having to resort to much violence. Little subversive effort appears to have been directed toward the Southern Thais (Siamese).

EXTERNAL THREAT

(U) ~~(C)~~ There is no immediate external threat of invasion and probably no possibility of any serious threat by any of the states (Cambodia, Laos, Burma, and Malaysia) that border Thailand. This is owing not to any firm ties of friendship between Thailand and her neighbors, Malaysia excepted, but to the inability of these neighboring states to mount a cross-border offensive that could amount to more than a minor incursion.

(U) ~~(S)~~ The only real threat of direct aggression is posed by the possibility that the armies of North Vietnam and Communist China might attack from the territory of Burma, Laos, or Cambodia. This would provoke an immediate US response predicated on Thailand's fighting a delaying action to gain time for its Southeast Asia Treaty Organization (SEATO) allies to deploy their forces. The possibility of such an attack, however remote, poses a continuing requirement for the Royal Thai Army (RTA) to maintain a capability for mobile defense against direct aggression while conducting counterinsurgency operations.

INTERNAL THREAT IN THE NORTHEAST

(U) ~~(S)~~ The Northeast Region, about one-third of the country in area and population, comprises 15 provinces (changwads) having a total of 51 districts (amphur) and municipalities (muang). Of these there are 15 districts in seven eastern and northeastern provinces of Loei, Nong Khai, Nakhon Phanom, Udon Thani, Sakhon Nakhon, Kalasin, and Ubon Ratchathani in which significant subversive activity occurs (see Fig. 18). The population of the 15 districts is estimated at 1.1 million. The soil is poor, and so are the people in every aspect of life. They are ill-clad, inadequately sheltered, ill-informed, undernourished, and unacquainted with elemental practices of hygiene and sanitation—all the "favorable factors," except perhaps for terrain,[31] for breeding dissidence and instigating subversive movements. Much of the terrain is fairly open and thinly forested with few water sources during the dry season, although there are two remote mountainous areas, Phu Phan in Nakhon Phanom province and Phu Singh in Nong Khai, that are ideal guerrilla country.

(U)*A pejorative deliberately used by the British to designate members of the Malay Races Liberation Army (MRLA) during the Emergency, 1948–1960, in what is now Malaysia. The object was to avoid using the term "guerrilla," which was believed to have sympathetic and romantic overtones. The Thais continued to use the term for an estimated 500 members of the MRLA who withdrew to the southernmost province of Thailand. Recently CT has been used to refer to all subversives in Thailand.

UNCLASSIFIED

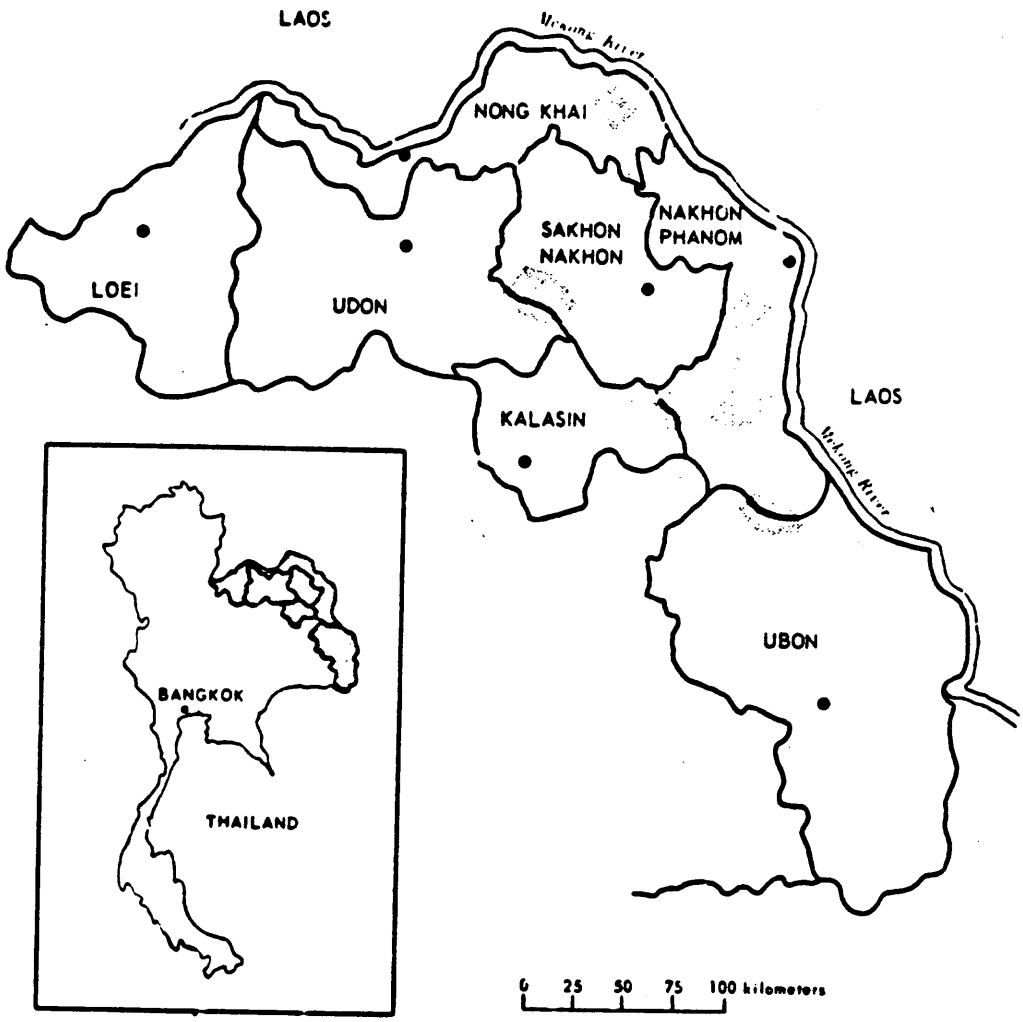

~~(S)~~ (U)

Fig. 18—Insurgency in Northeast Thailand
Areas of high incident rates, March–April 1967.

RAC

UNCLASSIFIED

(U) (S) Communist influence dates back to the 1920's. The RTG recognized the danger and for some years has been attempting to alleviate the poverty of the people and win their loyalty but without any great sense of urgency. The subversive organizations were apparently without much purposeful direction or support until 1965. During the second half of that year the assassination of officials, which had occurred at a rate of only 10 a year, rose to 4 a month and continued to rise to 10 a month during the first half of 1966. The increased frequency of forced propaganda meetings and assassinations began about 6 months after the announcement by Peking in November 1964 of the formation of a "Thai Independence Movement" and in January 1965 of a "Patriotic Front of Thailand." In December 1965 the subversives intensified their effort by launching a campaign of small-unit aggression beginning with attacks against a Thai Special Forces unit and a police post.

(U) (S) Early in the summer of 1966 the movement began to place more emphasis on forced propaganda meetings in the villages. These incidents often involved relatively large numbers of subversives, including women. Groups of 50 to 80 were common, and there was one instance of a group reported to number 200. Frequently propaganda was combined with rice procurement.

(U) (S) The general trend in subversive activity continued upward until April 1967. A record of the three most significant types for the first 5 months of 1967 is shown in the accompanying tabulation.

Activity	Jan	Feb	Mar	Apr	May
Armed encounters	36	47	58	26	22
Assassinations	15	4	6	10	8
Forced propaganda meetings	18	17	26	21	10

(U) (S) Most of the armed encounters were brief fire fights with few casualties inflicted on either side. Government patrols seem to have initiated roughly half the contacts. Of more significance, perhaps, were the fairly constant assassinations and other acts of terror and the forced propaganda meetings that reflected a continuing effort to enlarge the base of popular support. The downtrend in CT activity after the month of March was thought to indicate a period of preparation toward the end of the dry season for an increasing effort during the coming rainy season. Another more optimistic view, with some evidence to support it, is that the drop in activity was due to a halt in recruitment because of a shortage of food. Some of the activities attributed to communists, however, may be nothing more than the work of bandits with no subversive political motivation. Banditry has long been a part of the northeastern environment. When the harvest is in, this lawless activity intensifies until planting season when it again drops off.

(U) (S) The record suggests that dissidence tinged with communism of long standing in Northeast Thailand has been energized with out-of-country support and coordination. Armed-guerrilla strength is estimated at 1300 to 1500 organized as separate bands of platoon size. As of mid-1967 there was no evidence of numerical unit designation. The outlook was for a slowly intensifying insurgency for several months before RTG countermeasures could be expected to reverse the trend. Although the existence of active communist subversion in the Northeast was recognized as early as 1961 and programs to counter the threat were adopted, it was not until January 1966 after the launching of small-scale guerrilla warfare that the RTG regarded the situation as critical.

UNCLASSIFIED

INTERNAL THREAT IN THE SOUTH

(U) The insurgent threat in the Peninsula is vastly different from that in the Northeast. The CTs learned several lessons from their failure in Malaya. There they were unable to successfully appeal politically to the Muslim Malays because of racial and religious differences. Their race also facilitated recognition by government forces, particularly after they had been isolated in the jungle. Their early campaign of indiscriminate terror proved counterproductive. Because it alienated the Malays it was an obstacle to the development of a popular base and provoked a determined reaction on the part of the British and Malayan governments.

(U) ~~(S)~~ In Thailand until the spring of 1967 the CTs had pursued a policy of nonaggression toward the government. The people of the southern provinces are indifferent—even separatist—to the RTG. Concentrating on political activity, the CTs have quietly gained the support of a portion, and a neutral attitude on the part of the rest, of the rural population (see Fig. 19) with little resort to terror. The supporters are Thai-Chinese. The Muslims constitute the neutral element who accept the CT presence as part of the environment, and though they do not help them, neither will they inform on them. The CTs have been able to establish secret training camps in the jungle, hold large rallies in remote villages, and maintain uniformed armed units of platoon size. The command echelon and the hard-core membership are still predominantly Chinese.

Organization

(U) ~~(C)~~ After the failure in Malaya the CTs began to rebuild in Thailand. In 1958 the secretary general, Chin Peng, who had established a headquarters in Thailand in 1953, ordered two MRLA "regiments" in northern Malaya to withdraw to Thailand. In 1960 the Communist Terrorist Organization (CTO) was restructured by combining the military and political wings into a single chain of command.

(U) ~~(C)~~ The secretary general's group is the command echelon. There is the usual central committee of which the three regimental commanders are members. The regiments that have area responsibilities (see Fig. 19) are immediately subordinate to the secretary general's group. Each regimental headquarters has an armed uniformed mobile unit of 30 to 60 personnel under direct command. The purposes of the unit are to make shows of strength in villages: encourage reluctant contributors to make donations; and carry out any violence that may be necessary, such as beatings or assassinations of proved informers. In addition to their mobile units the regimental headquarters have small courier, printing, radio, and guard sections.

(U) ~~(C)~~ Under the regiment are several district organizations that have area responsibilities with small command elements of only a few persons. Under the district headquarters come the Armed Work Forces and their subordinate Armed Work Cells that are directly involved with the target—the people—through the Masses Organizations. It is the nonuniformed Armed Work Cell, usually only 5 or 6 people, that provides face-to-face contact with the people.

RAC

UNCLASSIFIED

UNCLASSIFIED

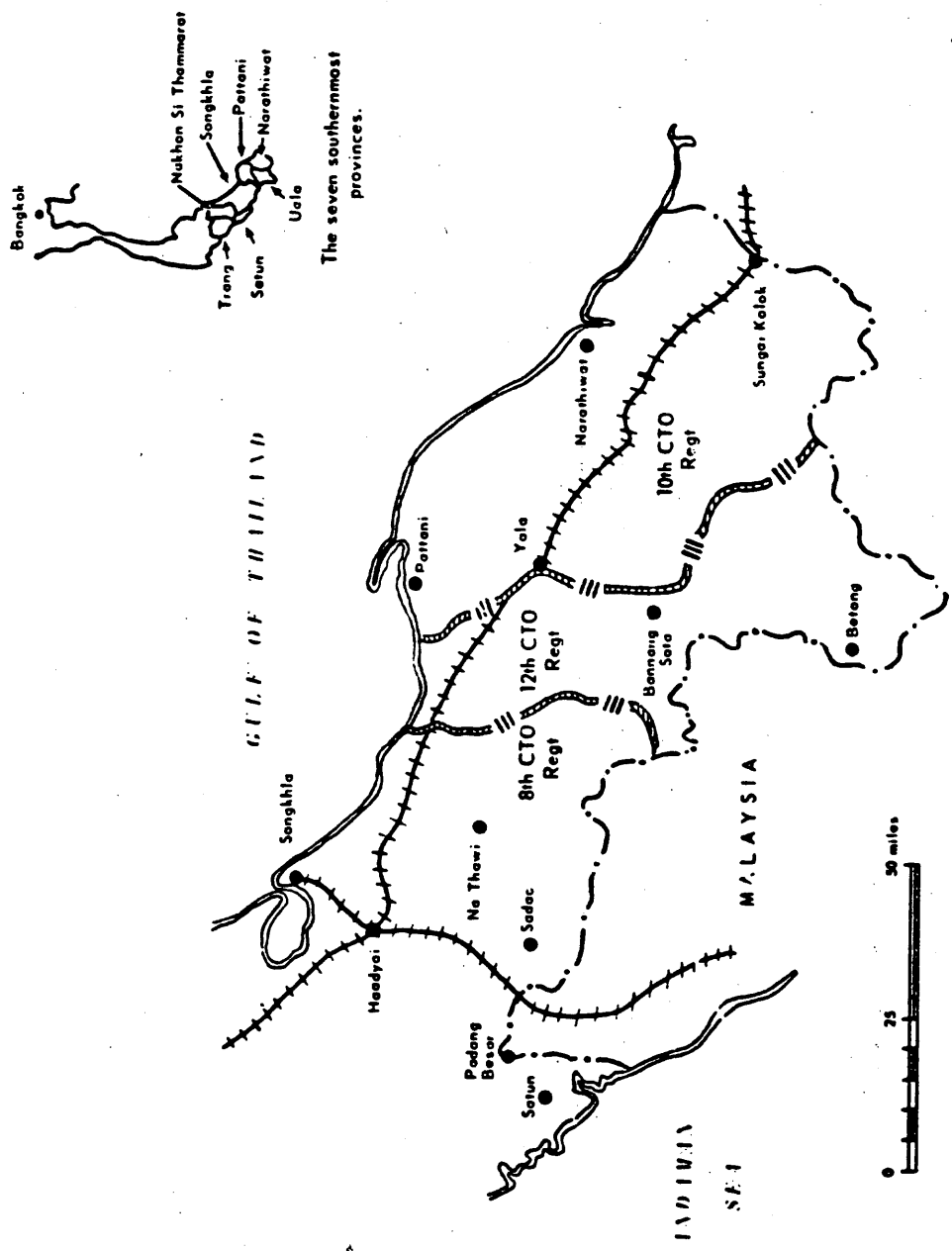

Fig. 19—Thailand Peninsula: Areas of CTO Activity
Betong and Sadao are Chinese areas almost completely controlled by CTO.

UNCLASSIFIED

(U) (~~C~~) The Masses Organizations are not a part of the CTO. They are local self-help groups (i.e., youth, women) with some common interest. Through the group leaders the CTO influences the members. The function of the Masses Organizations is to support the CTO by providing intelligence, buying and transporting supplies, collecting donations, and performing like activities.

(U) (~~C~~) There is also a Malayan Communist Youth League, a nonparty satellite of the Malayan Communist Party, controlled through the Armed Work Cells. It provides recruits for the mobile units and the party and recruits for its own ranks and other Masses Organizations. The identified members are all Chinese, except one Thai. About 20 percent are women. It is a rubber-tappers organization. Speculation suggests that a rubber tapper is well placed by his occupation to be contacted by party members in the jungle. Because he works alone and must visit his trees daily he is vulnerable and easy to contact and control.

(U) (~~C~~) The Communist Youth League is confined to two locations, Betong and Bannang Sata in Changwad Yala, within the area of the 12th CT Regt (see Fig. 19). It appears to be the vehicle for the expansion of the party and the mobile units. In this light it is definitely a threat if its present rate of growth continues: 1963, 21 members; 1964, 63; 1965, 112; 1966, 196. These figures project to about 3500 by 1970.

(U) (~~C~~) The CTO initially settled in clusters of small camps in the vicinity of the predominantly Chinese towns of Sadao in Changwad Songkhla and Betong in Changwad Yala in the areas of the 8th and 12th CT Regts. The 10th CT Regt, whose commander is a Malay, is believed to direct its efforts more toward the Malays. A separate section in the secretary general's group, the Central Department of Malay Works, is specifically concerned with the problems of recruiting among non-Chinese, chiefly the Malays.

Logistic Support

(U) (~~S~~) The CTO does not commandeer supplies and materiel from the people. The villager is urged but not forced to contribute. Financial support is provided by "subscriptions" solicited from plantation managers, tin-mine operators, small businessmen in the towns, and rubber tappers. The Masses Organizations help in the collection. So far the internal security forces have been able to interfere very little with what evidence indicates to be a well-organized system of support based within the population.

COMPARISON OF THE NORTHEAST AND THE SOUTH

(U) (~~S~~) Much more is known of the subversives in the South than in the Northeast.* The former appear to be the better organized, though it was the latter

(U) *The on-going studies in depth of Stanford Research Institute for Advanced Research Projects Agency (ARPA) concerning the CTO in South Thailand have developed a clear picture of this movement. Much of the previous history of the CTO could be obtained from Malaysian sources, and the files of the 9th Area headquarters of the Border Patrol Police (BPP) and those of the Thai-Malaysian Combined Intelligence headquarters at Songkhla seem to have contained more precise data than are obtainable in the Northeast.

who first intensified to guerrilla warfare. The insurgency in the Northeast is a more direct threat to the RTG. Unlike the CTO in the South, the insurgents in the Northeast can receive outside support directly from safe havens across the Mekong River. The political aim of the CTO effort, directed by and toward ethnic minorities, is not clear. Its propaganda line seems to be one of professing gratitude for having been permitted to reside among the people while recovering strength to return to Malaysia to try again. Its actions, however, suggest that what the CTO is really up to, and already has well in hand, is the development of a popular base of support to launch guerrilla warfare in southern Thailand.

Contrasting Patterns

(U) ~~(C)~~ The pattern of guerrilla operations in Northeast Thailand does not reflect great competence as of mid-1967 with one exception—government casualties in close-range engagements have almost a 1 to 1 ratio of killed to wounded with a high incidence of head wounds. Prisoners have stated that out-of-country training by North Vietnamese has stressed light-weapons marksmanship. The insurgents, however, have a long way to go before they can conduct raids and ambushes with the nearly perfect execution demonstrated by the Viet Cong as early as 1962. Evidence of highly competent direction and coordination is lacking, but perhaps much of the guerrilla activity so far has been for training purposes and show of strength. Limited exposure and quick disengagement with few casualties have been characteristic of most armed contacts.

(U) ~~(C)~~ The CTO effort in the South has been marked by sound organization, avoidance of clashes with the government, few acts of terror, and quiet expansion of a popular base that supports a growing hard core of subversives. There is little prospect of outside support, but the competence to coordinate and wage guerrilla warfare is self-contained. If the CTs decide to launch it in South Thailand their operations will probably be much more effective than those that have taken place in the Northeast so far.

(U) ~~(C)~~ Although it is possible that the insurgent movements in the Northeast and in the South are to some degree coordinated (the RTG is inclined to believe so), it is unlikely at this stage and also irrelevant. The RTG is faced with two insurgent movements, far apart at the extremities of its territory and dissimilar in character. It hopes to crush or at least contain both indefinitely to manageable proportions. If it fails in this and the two insurgencies develop such a capability for sustained guerrilla warfare that a joint directorate over operations conducted by each would be feasible and mutually advantageous, it will be very late in the day for the RTG.

Chapter 16

THAI ASSETS FOR INTERNAL DEFENSE

(U) In the larger sense the entire population (less the subversives and criminal classes) within the borders of Thailand and all that it has developed in culture, capital assets, governmental organization, education, and means of coercion constitute counterinsurgency assets. This chapter is concerned only with the means of coercion, and only in part. The Royal Thai Armed Forces (RTAF), the Thai National Police Department (TNPD), the Volunteer Defense Corps (VDC), and the machinery of government that directs their activities embrace these assets, but also much more. These agencies must carry on with many normal tasks despite active insurgency. The police must maintain law and order in areas where there is no subversion. The armed forces must maintain operational readiness to defend the country against invasion. Only a fraction of their personnel and equipment can be committed against an insurgency in a particular region.

(U) The Royal Thai Government (RTG) with US Mission concurrence recognizes the TNPD as its first line of defense against subversive insurgency. Some US Army advisers question this, yet it is sound. Military men are apt to think of counterinsurgency in terms of Phase II coordinated guerrilla warfare in which the urgent problem is to find, fix, and destroy the guerrilla. They often ignore the closely related fundamental problem of discovering and destroying the political infrastructure that recruits and directs the guerrilla and controls the people. In incipient and Phase I insurgency, however, this is the problem. The identification and elimination of the subversive hard core in the formative stage of the movement when it is quietly attempting to build a popular base is the principal urgent task. The National Police, because of their nationwide contact with the people, are the proper instrument.

(U) The intelligence function, similar in nature and in methods of collection to normal police intelligence with respect to criminals, is paramount in incipient insurgency. Internal defense intelligence comes from the people. Military combat intelligence can have only a minor role in the incipient stage* except in countries that (unlike Thailand) do not have an external threat. The

*The conscript system presents Royal Thai Army (RTA) intelligence with an opportunity that is probably not fully exploited. Conscripts are now called up every 6 months. They come from villages throughout Thailand. If each conscript were thoroughly interrogated about subversive and other lawless activity in his native village, much intelligence of value to TNPD files might result.

MAC

UNCLASSIFIED

role of the military becomes dominant in Phase II when the emphasis is on counterguerrilla operations, but when that stage is reached it is clear that the police, with the military in a backup role, have failed to identify and contain the subversives in Phase I, certainly the desirable time to do so. In May 1967 the two subversive movements in Thailand were still below the level where the dominant role must shift from the police to the military, although the one in the Northeast was at the threshold.

(U) Because these instruments of coercion operate within the frame of the provincial government, a brief description of the local administration of the RTG is pertinent before an analysis of the police and the military as counter-insurgency assets is presented.

PROVINCIAL GOVERNMENTAL STRUCTURE

(U) Although there are intermediate levels of government administration that correspond to the areas of the Border Patrol Police (BPP) and the regions of the Provincial Police (PP) and contain from six to nine provinces, the highest level of civil government below Bangkok is that of the province (changwad). There are 71 provinces whose governors are appointed by the central government, and there are representatives of various ministries and departments of the latter in the province capitals. Each province is divided into several districts (amphurs), the lowest level of professional administration. District officers (Nai amphurs) are also appointed. There are 448 districts. Next below the district is the commune (tambon) or group of villages (muban). The headman (puyaiban) of the village is an elected official. The village headmen choose one of their number to be chief headman (kamnan) of the tambon, with the approval of the district officer. This official is sometimes placed in an equivocal position because the district officer relies on him to see that the villages comply with the policies of the central and provincial governments, but he also must represent the grievances and wishes of the village headmen to the district officer.

THAI NATIONAL POLICE DEPARTMENT

(U) [illegible]

UNCLASSIFIED

relevant to the present situation comprise the PP, the BPP, and certain field offices of the Criminal Investigation Department (CID). Both the BPP and the PP come under the Commissioner of Provincial Police, although the former has its own headquarters with a general staff in Bangkok. Figure 21 shows the regional organization of the PP and BPP.

Border Patrol Police

(U) ~~(C)~~ This paramilitary organization with a strength of 6300 has been for some years an effective counterinsurgency force. Until recently its principal mission—surveillance of the 4800 kilometers of land border—required such an attenuated linear deployment of the entire force that only a relatively small number of fixed platoons, with virtually no reinforcement capability at area headquarters level, figured in the counterinsurgency efforts in the Northeast and the South.

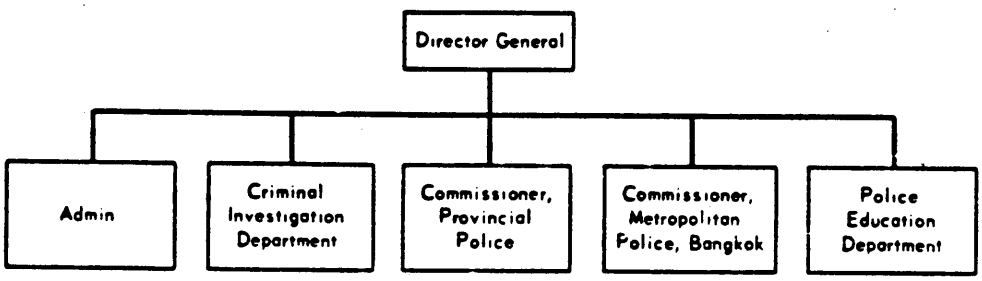

(U) Fig. 20—Organization of the TNPD

(U) ~~(S)~~ This weakness has been corrected, but at the expense of reducing the strength of the border (or line) platoons from 47 to 30 in order to create 19 mobile reserve platoons (MRPs) without increasing planned overall strength. Although two or three of the new platoons were assigned to each of the eight area headquarters, the reorganization was mainly a consequence of the increased seriousness of the threat in the Northeast in 1965 and fear of increased subversion elsewhere. Of the 19 MRPs, 11 were assigned to areas 8 and 9 in the South and areas 3 and 4 in the Northeast, the principal areas of insurgent activity.

(S) Deployment of the MRPs began in February 1966 and continued [illegible] 1967 as they completed a 6-week course of training. They provide the BPP area commander with tactical units to reinforce a line platoon on the [illegible], to undertake special remote-area patrols and civic action, and to pro[illegible] greater BPP contribution to point suppression operations in the areas of [illegible] The MRP platoon, with a headquarters of six and three squads of [illegible] the heaviest and lightest infantry weapons and adequate [illegible]

[illegible] BPP [illegible] for several years had an excellent but limited backup [illegible] Special Performance Unit (PARU), which has an [illegible] and the capability to deliver highly skilled [illegible] areas for special intelligence-collection

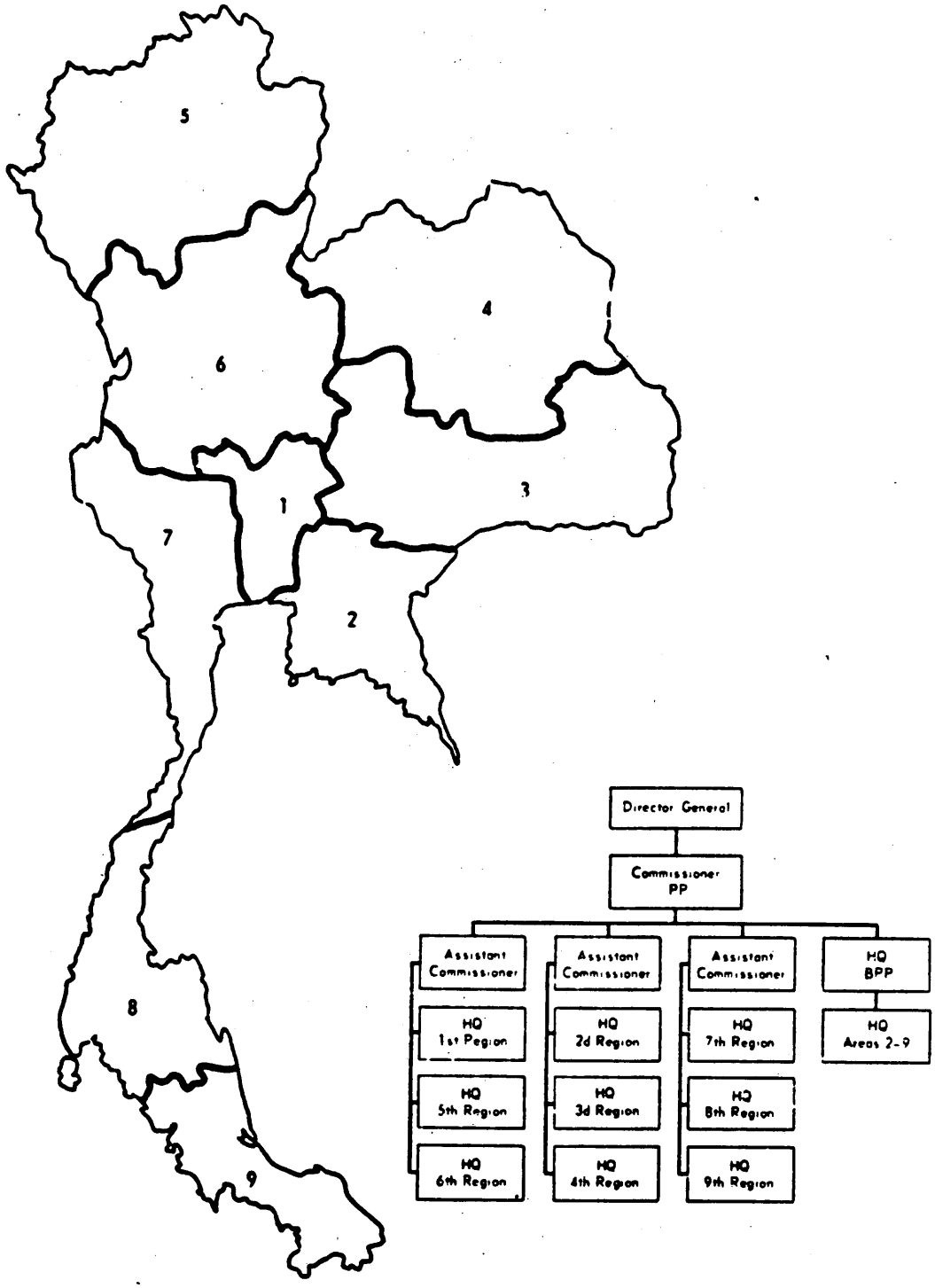

(U) **Fig. 21—Thailand: PP Regions and BPP Areas**

BPP areas correspond to PP regions except that there is no requirement for BPP in Region 1. Regional headquarters of the PP and area headquarters of the BPP are not all collocated.

and counterguerrilla missions. It is not intended for commitment as a unit, although this can be done. The PARU is a flexible asset that provides rapid deployment of special skills, to perform specific independent tasks of a covert nature, or to enhance the effectiveness of other ground forces, rather than a substantial reinforcement in terms of numbers. BPP resources include both rotary and fixed-wing aircraft.

(U) (S) Line-platoon patrols contact remote villages, both Thai and Hill Tribe, in the 25-kilometer-wide belt that is the BPP area of responsibility along the borders. The patrols emphasized civic action, intelligence collection, and surveillance of the people in remote villages through a system of group photographs of all persons living in each dwelling and the systematic reporting and updating of basic information about the villages. The BPP medics who undergo a full year of training at the Police Hospital in Bangkok have a capability for remote-area civic action relatively comparable to USASF medical specialists.

Provincial Police

(U) (S) The principal mission of the PP (32,000) is to maintain law and order throughout Thailand except in the Bangkok-Thonburi area, which is the responsibility of the metropolitan police, and in the border belt. Until recently the PP had been much neglected. It lacked a paramilitary capability and operated largely from province and district stations on a patrol basis. A beginning was made in 1966 to broaden the coverage of the PP by adding 1000 tambon stations at the rate of 250 a year.

(U) (S) Again in response to the increasing seriousness of the subversion in the Northeast in 1965, paramilitary units were created—the Special Action Forces (SAF), consisting of platoons of 50 to give the PP regional commanders a paramilitary capability for quick response. Deployment began in July 1966, and by January 1967 14 platoons were operational with 8 more programmed. The platoon commander is a captain who has a lieutenant as deputy and a sergeant major, two radio operators, a driver, a supply sergeant, a medical specialist, and two messengers in his platoon headquarters. There are four squads of 10 men each.

The Police Asset in the Areas of Subversion

(U) (S) The insurgencies in the Northeast and South range over parts of at least 12 provinces. With a total of 71 provinces in all Thailand, it is obvious that only a fraction of the strength of the BPP and PP can be brought to bear against the insurgents.

MILITARY ASSETS

(U) (S) The RTA contains the bulk of the military counterinsurgency assets, principally the Thai Special Forces, infantry battalions, and pack-cavalry squadrons, but the three infantry battalions of the Royal Thai Marine Corps must also be counted as such (see Fig. 22). Although the strength of the RTA was about 90,000 (relatively small compared with the population), its combat strength is limited to three infantry divisions, one "cavalry" division, one

UNCLASSIFIED

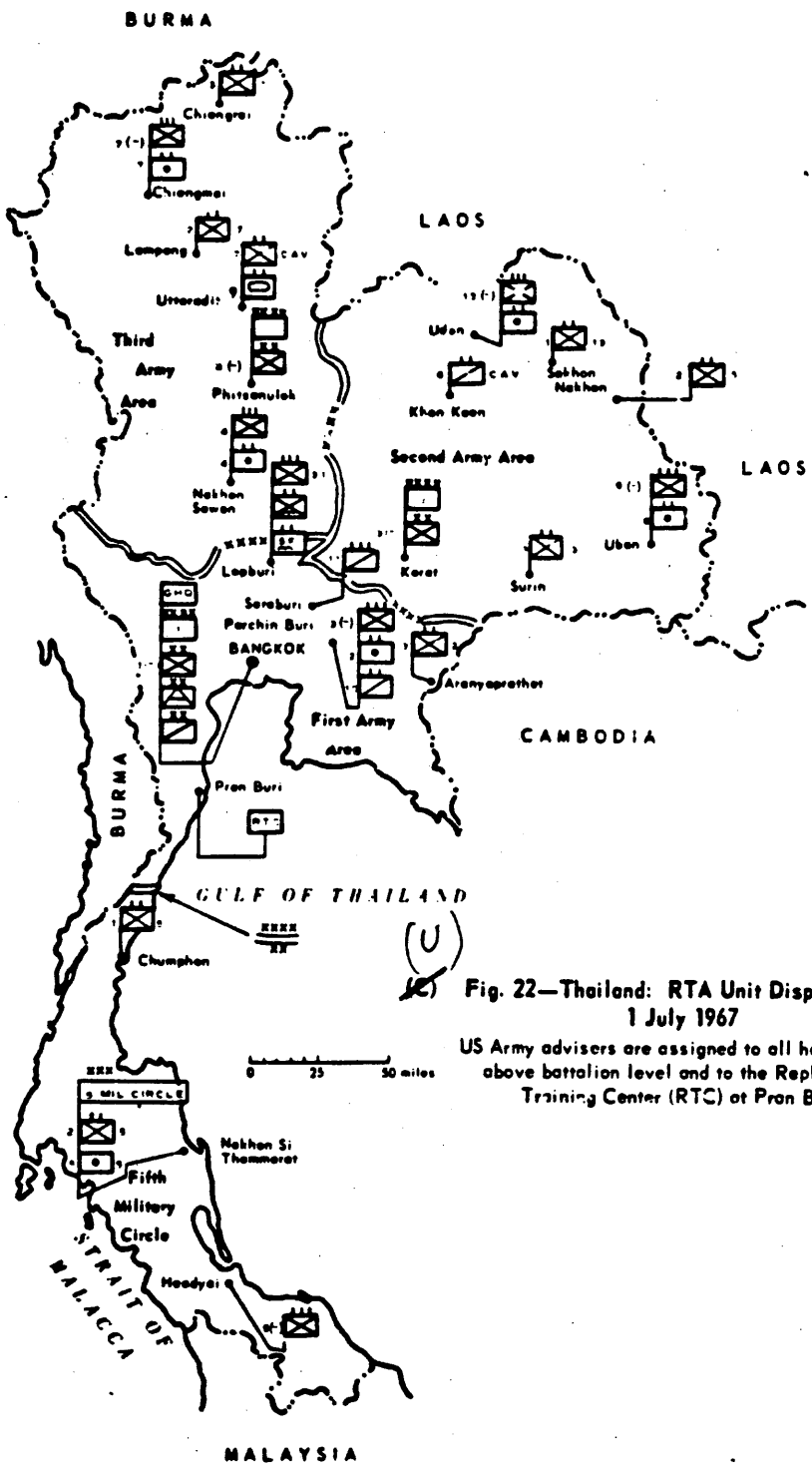

(U)

~~(C)~~ **Fig. 22—Thailand: RTA Unit Dispositions, 1 July 1967**

US Army advisers are assigned to all headquarters above battalion level and to the Replacement Training Center (RTC) at Pran Buri.

UNCLASSIFIED

independent regimental combat team (RCT), one Special Forces group, one airborne battalion, one antiaircraft artillery (AAA) division, and one independent artillery battalion.

(U) ~~(S)~~ Until the fall of 1966 the infantry units, always considerably below authorized strength, had received only intermittent training in counterguerrilla operations. With the arrival of a large US Special Forces mobile training team (MTT) in the spring of 1966, plans to improve the training were developed. As of July 1967 the RTA troop list available for counterguerrilla operations was approximately as shown in Table 8. Because of chronic understrength, infantry battalions could each field an average of only two full-strength rifle companies.

(U) ~~(S)~~

TABLE 8

RTA Troops Available for Counterinsurgency Operations in Northeast and South Thailand, July 1967

a. Northeast[a]

2d Army	Location	Rifle companies	Men
3d RCT	1 battalion at Korat	2	422
	1 battalion at Surin	2	422
	1 battalion at Sakhon Nakhon	2	422
6th RCT	3 battalions at Ubon	6	1266
13th RCT	3 battalions at Udon	6	1266
6th pack-cavalry Squadron	1 Squadron at Khon Kaen	2	422
Total		20	4220

b. South

5th Military circle	Location	Rifle companies	Men
5th RCT	1 battalion at Pattani	2	422
	1 battalion at Chumphon	2	422
	1 battalion at Nakhon Si Thammarat	2	422
	1 battalion at Haadyai	2	422
Total		8	1688

[a]Elements of the Special Forces Group and the Airborne Battalion were also in the Northeast.

(U) ~~(S)~~ In the Northern Region (3d Army area) there are six battalions and one pack squadron of which two (4 companies, 844 men) could probably be committed in the Northeast or South if urgently needed. In the Central Region (1st Army area) there are 16 battalions, of which probably not more than three (6 companies, 1266 men) could be committed to the Northeast or South because of requirements relating to the security of Bangkok. The Airborne Battalion is trained and at full strength with three companies totaling 764 men, as is the Special Forces Group with four companies totaling 838. In mid-1967 most of the elements of the Airborne and Special Forces units were deployed in the Northeast.

(U) ~~(S)~~ Thus to the 20 companies (4220 men) stationed in the Northeast, four (844) could be added from the North, six (1266) from the Central Region, and seven from the Airborne Battalion and Special Forces for a total of 36 companies (7932). This appears to be the maximum RTA potential in the Northeast in an atmosphere of urgency and intensifying guerrilla warfare if it is necessary to retain some posture for defense against external aggression and for the security of Bangkok, as well as to maintain present strength against the threat in the South. The RTA has no organized reserve, but it does have a large pool of trained former conscripts. If enough were called up to fill the ranks of the undermanned battalions (see Table 9) the RTA could probably commit about 12,000 infantrymen to the Northeast.

(U) ~~(S)~~

TABLE 9

RTA Manning Levels, September 1966

Force	Authorized strength	Actual strength[a]	Percent of authorized strength
MAP[b]	109,266	73,914	67
Non-MAP	33,352	14,448	43
Total	142,618	88,362	62

[a]Primary cause of understrength is early release of conscripts who, although not discharged until the end of their 24 months of obligated service, are released on leave 2 to 8 months early.

[b]Military Assistance Program.

Volunteer Defense Corps

(U) ~~(S)~~ The VDC has been loosely described as "something like" the US National Guard. It most certainly is not. Neither a force of combined arms nor with tactical organization above the light-infantry company, it nevertheless is a potential countrywide counterinsurgency asset that has received considerable support from the RTG since 1964, after years of neglect and little training. Bravely named the "Honorable Corps of Wild Tigers" by King Rama VI, who created it in 1911, the organization was redesignated the VDC in 1954 when it entered a period of growth that terminated in 1957 when the late Field Marshal Sarit came to power and drastically reduced the fund allocation for training. He restored the allocation in 1962, and since that year the retraining of the VDC as a paramilitary asset has slowly progressed.

(U) ~~(S)~~ Organization. The VDC is a civilian organization under command of the Ministry of the Interior but is trained partly by the RTA. Some RTA officers have been assigned to the command echelons. Basically it is a home-guard organization at province, district, and commune levels. Its authorized strength in mid-1967 is shown in Table 10.

(U) ~~(S)~~ Actual strength figures were almost unobtainable because personnel administration was at province level and the program was developing unevenly. Actual strength was probably less than 40 percent, and it is certain that many units had received little training although training priority was given to platoons and squads in the Northeast. The Springfield rifle, model 1903, was the

UNCLASSIFIED

principal weapon, although many Japanese rifles were still being issued; there was no organic communications equipment. The VDC in mid-1967 could not be considered much of an asset. It was similar to the Popular Forces (PF) in Vietnam in mission but not in competence.

(U)

TABLE 10

VDC Authorized Strength, Mid-1967

Level	Units[a]	Authorized strength per unit	Total authorized strength
Province	142 companies	160	22,720
District	538 platoons	57	30,666
Commune	4922 squads	12	59,065
Total	—	—	112,450

[a]District platoons are not organic to province companies nor commune squads to district platoons.

Village Security Units

(U) The Village Security Unit (VSU) program was just getting under way in mid-1967. It was a projection of the VDC concept to the village level to add to local defense, since the VDC program extended only as far as the commune or group of villages.

SUMMARY COMMENT

(U) ~~(S)~~ The counterinsurgency assets of Thailand as a whole are relatively small in comparison with the population of 30 million. When considered in the light of two insurgent threats, far apart in the extreme Northeast and the South, and the number of trained units that could be sent from the North and Central Basin regions to reinforce the provinces where insurgency is active, the assets now available, although increasing in numbers and effectiveness, appear inadequate to oppose a guerrilla movement of any magnitude. The RTA Vietnam Regiment represents a significant reduction in available combat personnel that will be further reduced as the recent decision to increase this force to a "small division" is implemented. It is a matter of the utmost urgency to contain the threat in both the Northeast and the South. This means essentially to secure the people against terror and intimidation in concert with other efforts to stunt the growth of the popular base in both regions.

UNCLASSIFIED

Chapter 17

THAI ORGANIZATION FOR INTERNAL DEFENSE

(U) The previous chapter discussed the police, military, and paramilitary assets available to the Royal Thai Government (RTG) to combat insurgency. This chapter describes the special organizations that have been established within the RTG to employ these assets.

NATIONAL SECURITY COMMAND

(U) ~~(S)~~ The National Security Command (NSC) was established in April 1962 as an interministerial mechanism to coordinate and direct all aspects of counterinsurgency. It was designed to function through interagency advisory committees representing the Ministries of Interior, Public Health, Agriculture, Education, and Public Relations. Emphasis was on civil control and marshaling the civil effort, with the military offstage as backup for the police. This was a rare example of an enlightened approach by the government of a developing country to the threat of insurgency. The Mobile Development Unit (MDU) program, directed at poverty-stricken alienated villages in the Northeast, was one of the earliest and most effective counterinsurgency programs sponsored by the NSC. When the insurgency in the Northeast intensified to a degree that required the commitment of Royal Thai Army (RTA) units, a new headquarters outside the NSC was established to direct joint operations in that region.* The NSC, however, continues to exercise direct control of Thai participation in the Thai/Malaysian counterinsurgency effort in the South.

COMMUNIST SUPPRESSION OPERATIONS COMMAND

(U) ~~(S)~~ On 27 December 1965, when subversive activity in the far Northeast was intensifying, Thai police suppression forces encountered resistance while sweeping portions of the Lubi Loei Valley and the Phu Phan Mountain Range in Nakhon Phanom Province. On the following day the police requested Royal Thai Air Force (RTAF) strikes against an estimated 100 to 200 armed insurgents in the valley.

(U) ~~(S)~~* This odd arrangement appears to have resulted from the failure of GEN Praphas to gain control of the NSC, which is headed by the prime minister. He had the power and control of the assets, however, to establish his own command to control the counterinsurgency in the Northeast.

(U) ~~(S)~~ On 30 December at a meeting in Bangkok the governor of Nakhon Phanom and the provincial police commissioner told GEN Praphas Charusathien, Minister of Interior and also commander in chief of the Army and deputy prime minister, that army support was needed in the province to meet the threat. GEN Praphas acted without delay. On 31 December a battalion combat team composed of the 2d Bn, 13th RCT, three Royal Thai Army Special Forces (RTASF) detachments, and other elements moved from Udon to the Phu Phan mountain complex to reinforce the police. At the same time the Communist Suppression Operations Command (CSOC) was established in the Suan Kularp Palace in Bangkok to exercise control through a Task Force commanded by a special colonel at Mukdahan.[15] It was timely action. On 4 January 1966 a police jeep with seven passengers was ambushed by 20 insurgents on Highway 27, 7 kilometers north of the Mukdahan Signal Site. Two policemen and one civilian were killed.

Communist Suppression Operations Command at the National Level

(U) ~~(C)~~ The top echelon consists of GEN Praphas, a civilian deputy (Under-Secretary, Ministry of Interior), a police deputy (Director General, Thai National Police Department (TNPD)), and a military deputy (Deputy Minister of Defense). An advisory committee is composed of senior officials of other ministries concerned with countering subversion. An inspection committee advises on civil administration and economic development. A chief of staff is assisted by five deputies: Deputy Chief of Staff for Operations of the RTA, the Commander of the National Police Interrogation Center, Commissioner of Provincial Police, Deputy Under-Secretary of Interior for Administration, and Deputy Director of the Department of Local Administration. The staff sections of CSOC include (a) a Civilian Division that coordinates CSOC activities with strictly civilian efforts; (b) a Counterinsurgency Division composed of subsections that deal with personnel, intelligence operations, and psychological operations; and (c) a Service and Support Division that coordinates and arranges for logistic and financial support, weapons and equipment, and transportation.

Communist Suppression Operations Command in the Field

(U) ~~(S)~~ The principle of civilian control is preserved in the provinces troubled by insurgency. What amounts to a tactical operations center is called the CPM, a vague designation meaning Civil-Police-Military. The "civil" is personified by the governor of the province who is the CPM commander in much more than a merely titular way. The governor is assigned a military adviser with supporting staff from the RTA. The police adviser is the province police chief. Military assets, and police assets in addition to those belonging to the province, are assigned by CSOC as required. Each Northeastern province actively combating insurgency has its CPM. An intermediate regional headquarters (CPM 1, sometimes called CSOC Forward) is located at Sakhon Nakhon to which the province CPMs report (see Fig. 23).

(U) ~~(S)~~ CPM 1 evolved from Task Group Mukdahan that was already in existence in December 1965. Its principal asset at that time was one infantry battalion. The special colonel commanding this task force had been invested with

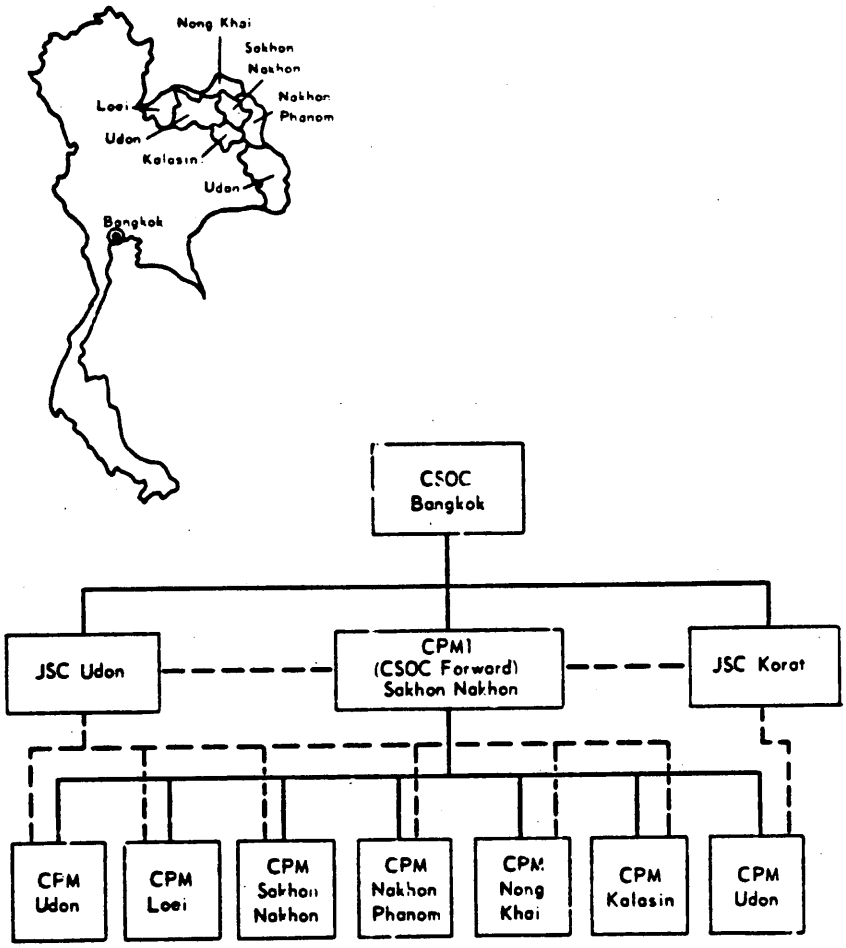

~~(C)~~ (U)

Fig. 23—CSOC System, Northeast Thailand

——— Command and direct reporting channels

— — — Coordination and information reporting

the authority of a military governor. In January 1966 the headquarters was renamed CPM 1 and moved to Sakhon Nakhon, a more central location for control of the province CPMs. The special colonel was later promoted to major general. He has four deputies, three of whom represent the RTA and Regions 3 and 4 police headquarters, and the fourth, a civilian who has little authority but is charged with civic action programs.

(U) ~~(S)~~ Joint Security Centers. There are two Joint Security Centers (JSCs), in the CSOC CPM system in the Northeast, at Korat and Udorn, and one in the South at Nakhon Si Thammarat. JSCs plan for and carry out the collection and processing of countersubversive (internal defense) intelligence. They also coordinate and correlate other activities that involve intelligence and disseminate their analyzed product to users. All counterinsurgency intelligence assets are represented in the JSCs—Provincial and Border Patrol Police, RTA, and the Special Branch of the Criminal Investigation Department.

Concept of Operations

(U) ~~(S)~~ Operations have been based on the 09-10 (Nine Ten) Plan, which designated 10 objective areas, usually mountain areas known to be or suspected of harboring guerrillas and ringed by "secure" villages, one of which was designated the Target Control Village. The district officer commands from this headquarters as the representative of the provincial governor. He usually has a strike force of one platoon of infantry or police. The purpose is denial—to isolate the subversives outside the rings of secure villages and break the contact between subversives and people. The objective areas provide the frame for active operations against the insurgents. A principal weakness in the system is that CPM 1 cannot assume operational control. The governors control operations in their provinces.

Operations

(U) ~~(S)~~ All suppression operations are conducted under the CSOC CPM system. Air support is provided by the TNPD and RTAF. CPM 1 has a Direct Air Support Center (DASC) where a few helicopters are always available. The Air Operations Center (AOC) is in Bangkok. The RTAF provides aircraft and Tactical Air Control parties as required. Ground forces in excess of province assets are provided by the TNPD and RTA. For a joint operation, CPM 1 designates a commander, usually an RTA unit commander or a Border Patrol Police (BPP) officer from the appropriate area headquarters, but he and his command come under the operational control of the CPM (i.e., the governor of the province). (Early in October 1967 civilian control of counterguerrilla operations, though perhaps not of the counterinsurgency program as a whole in the Northeast, was taken over by the RTA.)

(U) ~~(S)~~ Scope. The RTA has provided forces of up to two battalions to CSOC for counterinsurgency operations. At one time 22 RTASF teams and a composite airborne company were attached to CPM 1 for operations in the Mukdahan area. Altogether the RTA conducted a total of 252 battalion days of field operations during the first 7 months of 1966, or an average daily commitment of about 1½ battalions—not an intensive effort in terms of 1000 guerrillas and six affected provinces.

(U) ~~(S)~~ Suppression operations through 1966 were subject to so many constraints and delays relating to request, approval, dispatch, and transfer of operational control to CPMs that an acceptable response time for reaction operations was not achieved. These are difficulties that must be worked out by a newly activated headquarters that assumes operational control of assets not its own. The CSOC CPM concept seems to have been developed and implemented largely through Thai initiatives with US advice from sources other than the Joint US Military Advisory Group (JUSMAG).

Relation with US

(U) ~~(S)~~ The creation of new command/control structures that are imposed on old ones to meet new requirements is not unusual within the RTG. The CSOC/JSC/CPM structure, which directs the joint operations of elements drawn from the RTA, TNPD, RTAF, and civilian agencies, places many requirements on the regular ministries, but it has two merits that probably could not be achieved with the existing machinery of the RTA: (a) control by a single authority of assets from several departments and (b) the preservation of civil governmental control.

(U) ~~(S)~~ The US Ambassador assigned primary responsibility for liaison with CSOC on behalf of the US Diplomatic Mission and other US representation to civilian personnel of a US agency who act as intelligence advisers at CSOC in Bangkok and at CPM 1. This arrangement severely constrains the Military Assistance Command, Thailand (MACTHAI), which has no representation at CSOC and, since January 1967, only one liaison officer at CPM 1. The liaison officer is not permitted to see much. US Army advisers including those of the 46th US Army Special Forces (USASF) Co are excluded from any active role in influencing the course of counterinsurgency operations.

NONMILITARY PROGRAMS

(U) ~~(C)~~ The Thai counterinsurgency effort is not limited to military/police action. Civilian programs are numerous (often overlapping) and actively pursued. The more important of these are summarized in the following paragraphs.

(U) ~~(C)~~ Accelerated Rural Development. Accelerated Rural Development (ARD) is more a concept than a program. Guided by an interministry committee that advises and provides support to the province governors, it seeks to develop a capability in selected provinces to initiate and supervise such rural-improvement impact projects as roads, reservoirs, and wells.

(U) Community Development. Community Development (CD) is a broadly organized self-help program in rural areas that was begun some years ago by the Ministry of the Interior.

(U) ~~(C)~~ Mobile Development Units. Beginning in 1962 MDUs, military/civilian teams, were deployed by the NSC to impoverished security-problem tambons to carry out high-impact economic improvement and social development programs. In mid-1967 there were 15 MDUs.

(U) ~~(C)~~ Peoples Action Teams. Small teams of civilians called Peoples Action Teams (PATs) are trained to work in rural areas to locate and identify communist terrorists.

UNCLASSIFIED

(U) (S) Tambon Volunteer Defense Corps. The RTA is charged with the training of the VDC, which is under the Ministry of Interior. The tambon VDC project was proposed and sponsored by the RTA on a pilot basis. By mid-1967 paramilitary squads of 12 men had been trained in 62 critical communes in the Northeast.

(U) (S) Village Security Units. The Village Security Unit (VSU) program was conceived by the Department of Local Administration of the Ministry of Interior. It is a pilot project to extend the local self-defense capability to village level in Nakhon Phanom province. Early in 1967 70 mubans possessed a volunteer police force of 5 to 15 men.

(U) (C) Democratic Development Program. The Democratic Development Program (DDP) is another pilot project of the Ministry of Interior that endeavors to develop viable mechanisms of local government at tambon level.

(U) (C) Remote Area Security Development. The Remote Area Security Development (RASD) program is a BPP program for Hill Tribes and remote-area Thai villages.

US Support

(U) (S) Almost every ministry in the RTG has a hand in some program although the Ministries of Defense and Interior share the greatest responsibility. Coordination of US advice and support for all Thai agencies concerned with counterinsurgency is effected within the regular staffing of the US Diplomatic Mission under the direction of the Ambassador. Action officers of JUSMAG, the US Operations Mission (USOM), the US Information Service (USIS), and another agency meet under the chairmanship of the Special Assistant for Counterinsurgency.

(U) (S) USAID supports the Provincial Police (PP) and, in coordination with another US agency, the BPP, in addition to ARD, CD, DDP, and the VSU pilot project. The US also supports the BPP, the Criminal Investigation Department, JSCs, and the PAT pilot project. The US also provides military assistance to elements of the Thai armed forces committed to counterinsurgency operations and supports the MDU's. The US further provides direct support to the Thai counterinsurgency effort through such US Armed Forces elements as Sea Bee and Mobile Medical Teams and Engineer Control and Advisory Detachment (ECAD) Training Teams.

SUMMARY COMMENT

(U) (C) The RTG has placed emphasis on nonmilitary programs to remove causes of discontent and dissidence in the Northeast. It regards the TNPD as the first line of defense in actively countering incipient insurgency and has created a powerful interagency organization at the national level to direct counterinsurgency operations through field headquarters in the provinces. The approach is classically British—a combination of police and military under local civilian control with the collection of intelligence largely the responsibility of the police.

(U) (S) Military and police assets are relatively small in relation to the population. There are not nearly enough infantry battalions and police paramilitary

UNCLASSIFIED

units now in being to contain up to 3000 organized and trained guerrillas controlled by a political infrastructure well-rooted in a popular base of adequate size to support them. Official estimates place armed insurgency strength in the Northeast at 1300 to 1500. The estimate may be conservative. Insurgent operations to date do not reflect high competence, but this may indicate a training phase directed by experienced cadres from across the Mekong. Indications are, however, that even the modest scale of armed incidents (1966–1967) is disproportionate to the popular base so far developed.

(U) (S) In mid-1967 the main thrust of the counterinsurgent effort was not yet military, although troops were being used. The Thai organization to conduct Phase I counterinsurgency appeared sound within any one province, but the command relation for operations involving more than one province had yet to be determined, and RTA regimental and division commanders were unhappy about surrendering battalions to CSOC control. The effectiveness of the CSOC/CPM system, its responsiveness, and its capacity to adapt to the insurgent challenge remained unclear.

(U) (S) In the South the threat may actually be greater because of the submergence of the movement and the known competence of its hard core. Indications are that a formidable popular base has already been developed among the Chinese and that the communist terrorists are bridging the cultural gap to appeal successfully to the Muslims. The military, through they have been committed, appear to have no significant role in the present pre-guerrilla-warfare stage.

Chapter 18

US ARMY INTERNAL DEFENSE ADVISORY AND TRAINING ACTIVITIES

(U) US military assistance to Thailand began in 1950. With US funding, advice, and training the Royal Thai Armed Forces (RTAF) have been reorganized, reequipped, and trained in modern staff procedures and tactical concepts in accordance with US doctrine and practice. Hundreds of Thai officers have attended US branch schools and staff colleges. The result in 1960, about the time the US government began to realize the seriousness of the threat of subversive insurgency to developing countries everywhere, was a Royal Thai Army (RTA) organized and equipped for conventional operations and disposed in regimental and battalion units in all the principal regions but, for political reasons, most heavily concentrated near Bangkok.

(U) For many years the Royal Thai Government (RTG) had been mildly concerned about dissident groups in the impoverished Northeast and, after 1954, about the North Vietnamese refugees who had located there. Disquieting events in Laos and South Vietnam indicated what communist organizers could accomplish with an alienated rural population. Clearly a requirement existed for training the RTA and the Border Patrol Police (BPP) in the tactics and techniques of counterguerrilla warfare as a significant part of a comprehensive counterinsurgency program. The 1st Special Forces Group, Airborne (1st SFGA) on Okinawa provided a ready training resource.

EARLY US INTERNAL DEFENSE TRAINING IN THAILAND

(U) In 1960 US Army Special Forces (USASF) personnel entered Thailand for the first time. A company from the 1st SFGA took part in Exercise Dallas I near Korat with 500 Thai troops. A second exercise was held near Chiengmai that autumn with another company from Okinawa participating. The benefit was mutual since the 1st SFGA, its unconventional warfare mission in mind, welcomed the opportunity to gain firsthand knowledge of Thailand.

(U) Such exercises were continued in subsequent years, but in 1962 programmed counterinsurgency training was initiated with the introduction of six mobile training teams (MTTs) from the 1st SFGA to train RTA and BPP officer and NCO cadres who conducted counterinsurgency training for the infantry battalions of the RTA and the border platoons of the BPP during 1963. A 15-man MTT also conducted 4-week orientation courses for senior officers at Army headquarters locations.

UNCLASSIFIED

(U) ~~(C)~~ The USASF MTTs also trained the Royal Thai Army Special Forces Group (RTASFG), originally a ranger battalion. In 1964, proficiency training was conducted for 30 officers and 320 NCOs for a period of 2 months, and in March 1966 the 1st SFGA provided a large MTT for 6 months to work with the RTASFG. US Army Special Action Force, Asia (SAF Asia) personnel also participated in nonmilitary programs under the auspices of the US Agency for International Development (USAID). Four Accelerated Rural Development (ARD) Mobile Medical Teams began working for the Public Health Division and a Mobile Development Unit (MDU) Team for the Social Development Division of the Office of Rural Affairs in February 1966.

US ARMY SPECIAL FORCES MOBILE TRAINING TEAM, DET C-101-A (PROV)

(U) ~~(C)~~ Following an agreement reached at the SEACORD Conference in January 1966, USASF MTT, Det C-101-A (Prov), of 128 was requested by Commander, US Military Assistance Command, Thailand (COMUSMACTHAI) "for the purpose of planning and training with the RTA Special Forces Group in preparation for P22-101."*, [38]

(U) ~~(C)~~ The MTT was to consist of one operational detachment C, an administrative augmentation detachment, one operational detachment B, three operational detachments A, and a signal detachment. Commander, US Army, Pacific (COMUSARPAC) and Commander in Chief, Pacific (CINCPAC) approved the request, and Commander, US Army, Ryukyu Islands (COMUSARYIS) was tasked to provide the MTT. USARYIS, MACTHAI, and 1st SFGA had fortuitously established close liaison before this approval. An element within A Co was already planning for the participation of SAF Asia units in a Thai/US special warfare exercise scheduled for February. The exercise was canceled. Clearance to enter Thailand was received on 16 February and deployment began immediately. Company A was assigned the mission, the planning group became the control element.

Mission

(U) ~~(C)~~ The letter of instructions to the detachment commander stated in part:

> a. Establish rapport with the CO, RTA Special Forces Group, and advise and assist him in preparation for implementation of P22-101.
>
> b. Evaluate the status of training of the P22-101 elements of the RTASFG.
>
> c. Develop a program of training in conjunction with your Thai counterparts designed to correct deficiencies observed and to produce combat-ready combined operational detachments and control elements. . . .
>
> d. Organize and establish a Combined Special Forces Training Base (CSFTB)*. . . .

(U) ~~(S)~~* P22-101 is the unconventional warfare portion of a joint operations plan. Although designated an MTT, this unit was actually a portion of the US contribution to the force required for P22-101.

(U) ~~(S)~~* The RTG insisted on substituting "Training" for "Operational" in the title for what was in fact a CSFOB.

UNCLASSIFIED

e. Organize six combined operational detachments "A" composed of equal US/Thai participation, three of which will be commanded by US officers.

f. Launch a 15 week period of intensive combined joint training to commence on or about 18 April 1966 and continue through July 1966. . . .[56]

Deployment, Reorganization, and Training

(U) ~~(C)~~ The 6-month tour of Det C-101-A(Prov) in Thailand under the command of MAJ Ralph R. Drake was unique in that USASF and RTASFG personnel were completely integrated at both operational and control levels. MAJ Drake became deputy commander of the CSFTB under the Thai commander of the RTASFG. The combined staff was weighted on the American side, probably owing more to a shortage of Thai staff officers (the RTASFG had other commitments) than to lack of competence. The six operational A detachments were equally Thai/US including commander and executive officer spaces.

(U) ~~(C)~~ 19 February. The commanding officer and his S4 arrived in Bangkok and reported to COMUSMACTHAI.

(U) ~~(C)~~ 4 March. A four-man administrative group deployed to Thailand and proceeded to Lopburi to coordinate billets and work space with the RTASFG.

(U) ~~(C)~~ 12 March–14 April. The main body (less seven augmentation personnel assigned from CONUS) deployed to Lopburi in five increments. Integration of US and Thai personnel to form the CSFTB began with the arrival of the first increment. Each succeeding arrival was integrated with the corresponding Thai element. The command section, operations, administrative, and training staffs were combined and operational by 27 March, although the communications section was at only 60 percent of authorized strength until 6 April. Last to arrive were the three A detachments, which were formed into six combined teams at an appropriate ceremony on 18 April. Meanwhile the training program, which began on the same date, had been finalized and published on 1 April.

~~(C)~~ The Thai element consisted of 68 personnel including three A detachments. The combined organization had five functional parts: command section, operations center, administration center, communications section, and six operational detachments as shown in Fig. 24. Figure 25 depicts the relations of the MTT within the US Military Assistance Command.

(U) ~~(C)~~ The 15-week training program was designed to prepare Thai/US operational A detachments for selected special warfare missions. MOS refresher and language training were emphasized during the early stages. The balance of the training period was devoted to individual cross training and practical work in long-range reconnaissance and target acquisition with emphasis on helicopter infiltration and exfiltration and Forward Air Controller (FAC) procedures. The culmination of the training was an extended field reconnaissance exercise under combat conditions utilizing helicopters and strike aircraft of the RTAF and USAF.

Ancillary Tasks Performed

(U) ~~(C)~~ The USASF commander also served as principal adviser to COMUSMACTHAI on special warfare activities and provided another link between MACTHAI and Thai Special Forces. He was in a rather delicate position. Nominally second in command to a distinguished RTA colonel, he was, as the senior US officer, responsible to COMUSMACTHAI for matters involving

UNCLASSIFIED

~~CONFIDENTIAL~~

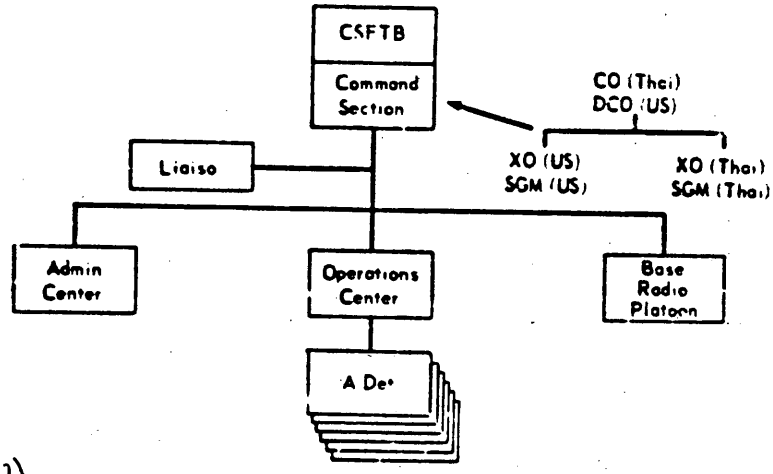

(U) Fig. 24—Det C-101-A (Prov) RTASF Organization

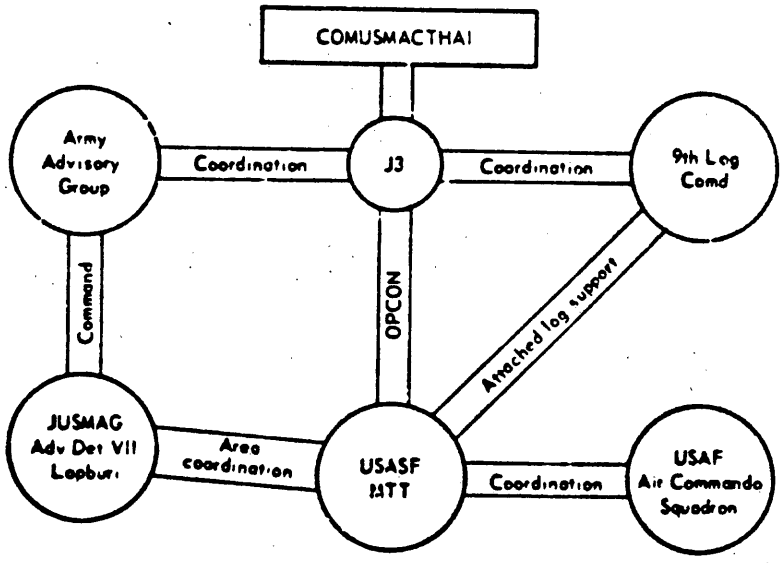

(U) Fig. 25—Det C-101-A (Prov) Relations within USMACTHAI

~~CONFIDENTIAL~~

UNCLASSIFIED

operational policy and concepts. Rapport, initiative, and demonstrable competence were essential to success.

(U) ~~(C)~~ Under his guidance the CSFTB, in addition to the 15-week intensive training program, (a) trained 158 RTA cadre students in the use of the MC1 (maneuverable) parachute;* (b) qualified 187 cadre students in the M16E1 rifle in anticipation of the issue of this weapon to the RTA; (c) provided advisory and training assistance for the recently organized RTA PSYOP Co; (d) developed a proposed program of CA/PSYOP for Hill Tribes and remote Thai villages; (e) updated and published a classified area study of Laos in support of OPLAN 22-101; and (f) developed the administrative and logistics requirements for the support of D Co (46th SF Co) which, it had been decided in May, would follow the MTT.

(U) Det C-101-A(Prov) also built, with engineer support, Camp Pawai, the USASF base near Lopburi, to provide the MTT with billets, mess hall, latrines, showers, generator and maintenance sheds, grease rack, and water tower. The detachment also renovated the Training Operations Center. The project completion date was 14 September 1966, but the MTT left Thailand on 2 September, and hence it did not benefit from this construction.

Redeployment to Home Station

(U) The main body departed Thailand for Okinawa in three increments between 31 August and 2 September. The last of these did not reach Okinawa until 6 September, having been diverted en route to Taiwan because of typhoon conditions. A small command and caretaker element remained at Lopburi to receive and brief the advance party of Co D. The return movement was completed on 28 September when this element reached Okinawa.

(U) The accomplishments of this provisional detachment elicited favorable comment from interested staff sections of US Army headquarters at home and in the Pacific and praise from the Director of Operations (G3) of the RTA. The major general commanding MACTHAI/JUSMAG recommended to CINCPAC that MAJ Drake be awarded the Joint Service Commendation Medal. Altogether, the conclusion is inescapable that this MTT accomplished its assigned mission and exploited its capabilities to an extent that cannot be demanded, but only hoped for, by higher authority and that is seldom achieved. Not that there were no problems. Some significant ones arose; they are discussed in Chap. 18.

THE 46TH SPECIAL FORCES COMPANY IN THAILAND

(U) In April 1966, just as the training capability of the MTT was beginning to impact, the RTG and the US Mission reached an agreement to replace the MTT at the end of its 6-month TDY tour with a USASF company in a PCS status. Co D, 1st SFGA, was therefore reactivated at Ft Bragg, N. C., on 15 April (there had been an alert in March) and directed to begin premission training for deployment to Thailand. (On 15 April 1967 Co D lost its tenuous affiliation with

(U) ~~(C)~~ * Suggested by CO Det C-101-A(Prov) in response to para b of the letter of instructions,* on learning that MC1 parachutes were stocked by the RTA but had never been used because of a lack of qualified instructors.

1st SFGA and became the 46th SF Co. This designation is used hereafter in the text.)

Predeployment Training

(U) Premission training could be programmed with much more certainty of what the training requirements actually were than is often the case. A special, 4-week "Asian Workshop" was scheduled under the auspices of East Carolina College with Far Eastern experts from the University of Michigan and Hunter College, N. Y. There was also a block of 4 weeks devoted entirely to area orientation with 4 hours of language instruction daily. Sixth Special Forces Group training was exploited.

Organization and Movement

(U) The authorized strength of a USASF company is 49 officers and 195 enlisted personnel organized into an administrative detachment, 1 operational detachment C, 3 operational detachments B, and 12 operational detachments A. Because of its mission and separation from its parent group, D Co was authorized a strength of 67 officers, 3 warrant officers, and 299 enlisted personnel, and it managed to assemble signal equipment comparable to that of the headquarters of a Special Forces group.

(U) This unit was formed from scratch. Everything had to be requisitioned. The activitating order authorized extra equipment such as trucks and the signal equipment already mentioned. There was no roofed space available at Ft Bragg to store equipment, hence only individual TOE equipment was issued. Typewriters, housekeeping gear, and the like were borrowed from other units at Ft Bragg, and the new requisitioned equipment was packed into container express (CONEX) crates for shipment as it arrived. Nothing of significance was lost en route. Two CONEX surface shipments were made.

(U) The company moved to Thailand by air in four echelons during September and October. These were (a) an advance S4 party of 3 that arrived at Lopburi to contact a few S4 personnel of the MTT who had remained to orient their incoming opposite numbers; (b) the commanding officer, LTC Robert H. Bartelt, and party of 15; (c) the main body; and (d) the S4 and party of 4.

Deployment of B Detachments

(U) The entire company remained at Lopburi until the end of October when Det B-4610 moved by bus to its campsite near the Nam Pung Dam southwest of Sakhon Nakhon. A week later Det B-4620 deployed to a camp near Pak Chong in Nakhon Ratchasima (Korat) Province. Det B-4630 had the best of this phase—they parachuted onto the airfield at Trang. The rainfall is heavy in the Peninsula and the airstrip was closed. Rail movement was considered but when S4 suggested parachuting a decision was quickly reached. Three C-123 sorties daily for 5 days were made to deliver 30 tons of equipment and 65 USASF and 20 RTSFG personnel. Only about $800 worth of equipment was lost. Vehicles were airlanded at Nakhon Si Thammarat about 60 miles distant.

(U) The CSFTB camp at Lopburi was just finished in time for the deployment of the 46th SF Co. A new camp was built by Det B-4610 near the Nam Pung Dam. Det B-4620 moved to Nong Takoo near Pak Chong and temporarily

occupied a camp originally built by the Advanced Research Projects Agency (ARPA) for a field project that had been completed. Later Det B-4620 erected and occupied a new facility but retained the old camp for its supplementary value. In the South, Det B-4630 personnel were also temporarily housed in a nearby scout camp while they built their own camp about 16 kilometers from Trang (see Fig. 26).

Training Activities

(U) During the period 14 November 1966–1 July 1967 the 46th SF Co trained personnel of the RTA, Royal Thai Marines, National Police, and Volunteer Defense Corps (VDC). RTA received the bulk of this training. Table 11 lists the training programs.

(U) Five-Week Communist Suppression Operations Command Company Course. The primary task that the RTA staff and the Army Advisory Group of JUSMAG contemplated for the 46th SF Co was a 5-week counterinsurgency course almost entirely devoted to counterguerrilla operations and individual and small-unit training. During each cycle of three phases, two RTA companies were to be trained in the Northeast and one in the South. The course was set up as follows:

(U) Phase I. A Thai US MTT conducts 1 week of instruction at the unit's home station employing the lecture demonstration practice method on such basic subjects as guerrilla tactics, surveillance techniques and reporting, squad combat formations, and movement. The unit fires its organic weapons and is inspected to ensure that it is properly equipped for Phase II.

(U) Phase II. The companies with their Thai US instructors move to Camp Nong Takoo (Det B-4620) in the Northeast and Camp Kachong (Det B-4630) in the South for 2 weeks of advanced individual and squad and platoon tactical training. Map reading, the compass, jungle firing, ambush and counterambush, raids, reconnaissance, air delivery, searching, and related subjects are taught using the same lecture demonstration practice method.

(U) Phase III. The companies at Camp Nong Takoo move to Camp Nam Pung in Sakhon Nakhon Province. The company at Camp Kachong remains there. This phase consists of 2 weeks of realistic field exercises at platoon and company levels beginning with the establishment of an operations base. Unit leaders plan and execute these exercises with RTASF USASF instructor personnel in the role of advisers and observers and with other USASF, RTASF personnel acting the part of guerrilla aggressors.

(U) ~~(C)~~ After completing Phase III the companies come under the operational control of Communist Suppression Operations Command (CSOC) Forward (CPM 1) in the Northeast and the commander of the 5th RCT in the South for 5 weeks of active counterguerrilla employment. USASF personnel remain at the training sites during the postcourse operational phase, but RTASF personnel take the field with the units as advisers. The companies return to their home stations when those in the following training cycle become operational. As of 1 July 1967, 12 companies had undergone this training in the Northeast and 3 in the South.

(U) ~~(C)~~ Three-Week Company Course. At the request of the RTA a 3-week shortened version of the 5-week course was programmed for 34 infantry companies not scheduled for the longer course (see Table 11). Training was to run

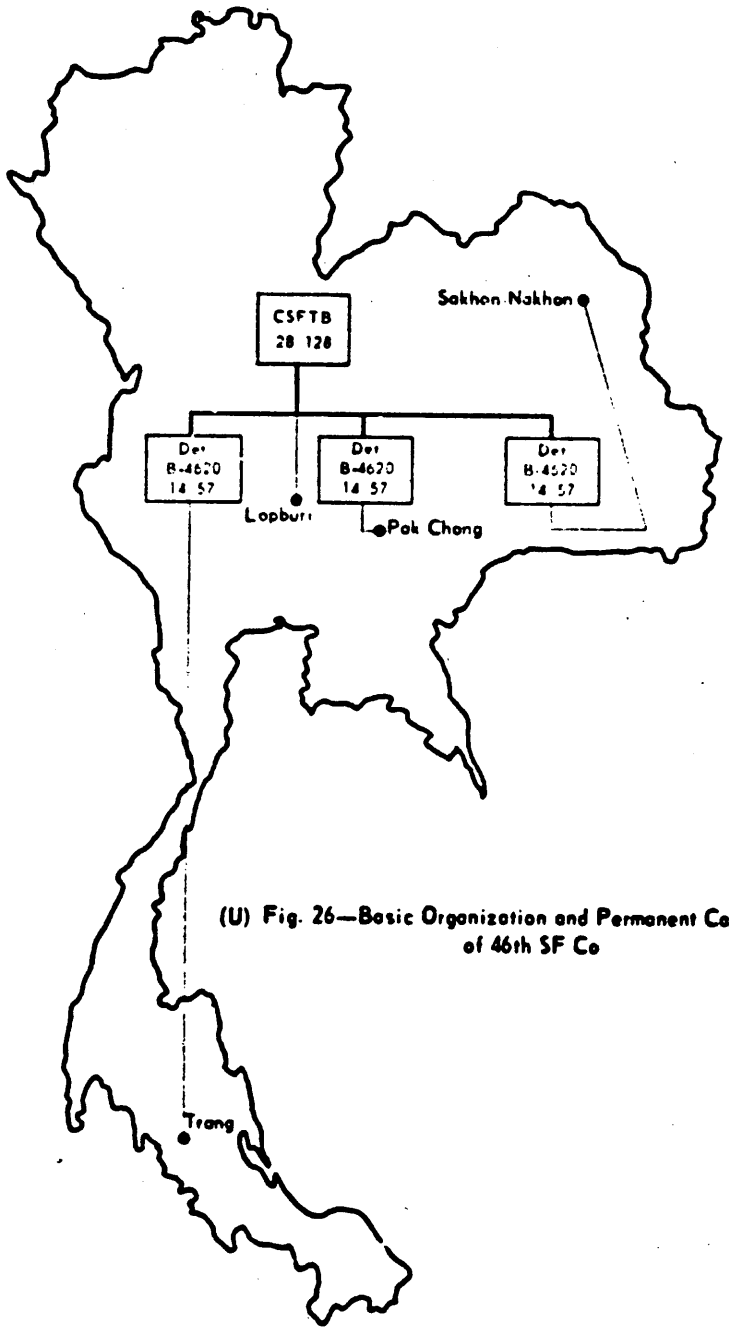

(U) Fig. 26—Basic Organization and Permanent Campsites of 46th SF Co

(U)

TABLE 11

Training Programs of the 46th SF Co

Primary organization or unit involved	Date program started	Units or personnel trained	Remarks
		5-Week Company Counterinsurgency Course	
RTA infantry companies	November 1966	Northeast Thailand 1st Co, 6th RCT (Udon) 2d Co, 13th RCT (Udon) 2d Co, 31 RCT (Korat) 31 Co, 31 RCT (Korat) 2d Co, 6th RCT (Udon) 31 Co, 13th RCT (Udon) 31 Co, 11th RCT (Bangkok) 1st Co, 31st RCT South Thailand 1st Co, 5th RCT (Nakhon Si Thammarat) 2d Co, 5th RCT 31 Co, 5th RCT	Phase I: 1 week of training at unit home station Phase II: 2 weeks at Pak Chong, Korat, Northeast Thailand, and Trang, South Thailand Phase III: 2 weeks at Nam Pong Dam, Northeast Thailand, and Trang, South Thailand
		4-Week Battalion Counterinsurgency Course	
RTA infantry battalions	May 1967	1st Bn, 31 RCT (Nakhon Nakhon) 31 Bn, 13th RCT (Udon) 2d Bn, 31 RCT (Korat)	One-time effort to train RTA battalions to be assigned to CSOC in Northeast Thailand
		3-Week Company Counterinsurgency Course	
RTA infantry companies	March 1967	1st Bn 2 cos, 1st Rgt 1 co, 2d Rgt 2 cos, 11th Rgt 2 cos, 21st Rgt 1 co, 31st Rgt 2 cos, 6th RCT 1 co, 5th RCT 1 co, 5th RCT 2d Bn 2 cos, 1st Rgt 2 cos, 11th Rgt 1 co, 21st Rgt 2 cos, 31st Rgt 2 cos, 6th RCT 1 co, 5th RCT 1 co, 5th RCT	To train companies not covered by 5-week course

TABLE 11 (continued)

Primary organization or unit involved	Date program started	Units or personnel trained	Remarks
		41 Bn 2 cos, 1st Bn 2 cos, 8th Bn 1 co, 11th Bn 1 co, 7th RCT 1 co, 5th RCT 8th Bn 2 cos, 5th RCT 19th Bn 2 cos, 21 Cav Bn	
		RTA Volunteer Regiment, Vietnam	
RTA Volunteer Regiment, Vietnam	March 1967	-	Operational effort to prepare Regiment for service in Vietnam
		Railway Police Course	
Railway Police, TNPD	March 1967	15 railway policemen	Trained at Camp Pacow, Lopburi
		Highway Police Course	
Royal Thai Highway Police, TNPD	May 1967	50 highway policemen	Second course begun June 1967
		VDC Training Course	
Volunteer Defense Corps, Ministry of Interior	November 1966	22 selected VDC personnel from Nong Khai Province	Expansion of this program under consideration
		HALO Course	
RTASF	March 1967	13 RTASF personnel	Additional training to be scheduled
		Special Officer and NCO UW Course	
RTA	February 1967	27 RTA officers and 9 NCOs	Additional courses to be scheduled as required
		Special Forces MOS Proficiency Course	
USASF, RTASF	January 1967	17 USASF personnel 32 RTASF personnel	Additional courses to be scheduled
		Royal Thai Marines Counterinsurgency Orientation Course	
Royal Thai Marines	February 1967	Royal Thai Marine officers	One-time effort
		Basic Airborne Course	
US Army, Royal Thai Army	January 1967	12 USA personnel 17 RTA personnel	Additional courses to be scheduled as required

from mid-April to the end of the Thai fiscal (and training) year on 30 September 1967. It was expected that the course would be continued during the next fiscal year. USASF officers regarded it as much too short, but it did have the merit of expanding counterguerrilla doctrine and training more rapidly throughout the RTA Infantry. Additional training sites were used for this course at Khao Yai, Phetburi Province, and Lom Sak in Phetchabun Province.

(U) Four-Week Battalion Course. The 4-week Battalion Course was a nonrecurring course to train three battalions for assignment to the operational control of CSOC Forward for counterinsurgency operations (see Table 11). Det B-4610 was tasked for this training.

(U) ~~(C)~~ RTA Volunteer Regiment, Vietnam. In January 1967 Task Force Slick was formed from Det B-4630 and the C detachment at Lopburi and from A detachments from each of the other B detachments. Infantry, artillery, armored cavalry, and engineer MTTs were formed to conduct a 16-week program to prepare the RTA Volunteer Regiment for combat operations in Vietnam. Initially the training was on a branch basis at different locations: infantry at Chon Buri; armored cavalry at the RTA Cavalry Center, Saraburi; artillery at the Artillery Center, Kokethiem; and engineers at the Engineer Training Center, Ratchaburi. The program, divided into four phases of equal length, began on 8 March.

Phase I. Individual basic and advanced training and squad tactics.

Phase II. Tactical training at platoon and company level.

Phase III. All elements were assembled at Kanjanaburi to take part in combined arms exercises at company level.

Phase IV. The regiment operated as a whole in command-post and field exercises stressing the requirements of the combat environment of Vietnam.

(U) Other Training Conducted. The demand for special courses in counterinsurgency for military and nonmilitary personnel has been brisk.

(U) Four-Week Railway Police Course. Following a request from the Public Safety Division of USAID, Thailand, 15 members of the Thai Railway Police were given instruction in railway security problems and antisabotage techniques during March 1967.

(U) Four-Week Highway Police Course. The Highway Police course was organized as a result of the favorable reaction of US Public Safety advisers and the Thai National Police Department to the Railway Police course. In May 1967 50 members of the Highway Police Patrol took this course in current tactics and techniques for securing highways against sabotage.

(U) Four-Week VDC Training Course. Members of the 46th SF Co assisted RTASF personnel in training 22 cadre students from Nong Khai Province during December 1966.

(U) Six-Week High Altitude Low Opening (HALO) Course. The first course was completed in March 1967 with 13 RTASF personnel receiving certificates.

(U) Eight-Week Special Officer and NCO Unconventional Warfare Course. This was conducted in February and March 1967 for 27 RTA officers and 9 NCOs and for 84 RTA personnel during the second quarter.

(U) Special Forces MOS Proficiency Course. This is designed to improve the skills of both USASF and RTASF personnel. Twenty-nine students attended the first course held in January and February 1967.

(U) Counterinsurgency Course for Royal Thai Marines. A 5-day counterinsurgency course was conducted in February for 64 Royal Thai Marine officers at the Sattahip Naval Base.

(U) Ten-Day Basic Airborne Course. Twelve US Army and 17 RTA personnel were given parachute-qualification training in January 1967.

Organization for Training

(U) ~~(C)~~ The special training missions assigned were so varied that the 46th SF Co had to maintain considerable flexibility to be able to respond to them. The bulk of the programmed training for the RTA infantry was conducted at the three B detachment sites, each of which was authorized a total of 71 US and 24 RTASF personnel. This figure included the four A detachments under each B detachment. A significant additional training mission, to provide predeployment training for the RTA Volunteer Regiment, Vietnam, required the equivalent of a fourth B detachment and four A detachments. This requirement was met by forming Task Force Slick as previously described. This of course drastically altered the strength figures and added to the locations. Table 12, a reproduction in part of the Unit Designation and Reporting List of 1 April 1967,[7] reflects these changes, and Fig. 27 shows the functional organization of the 46th SF Co including Task Force Slick. Requirements for MTTs for special training alters the locations frequently. There were 17 locations in May 1967.

THE 46TH SPECIAL FORCES COMPANY IN THE CONTEXT OF THE US COUNTERINSURGENCY ADVISORY EFFORT IN THAILAND

(U) ~~(C)~~ It is clear that MACTHAI has exploited the training capabilities of the 46th SF Co and its predecessor MTT to the fullest and that the RTA and other agencies of the RTG have not been reluctant to make personnel available for instruction. The mission of the 46th SF Co is purely counterinsurgency training—it has not been permitted an advisory role in the field. It is noteworthy that with respect to the principal client the training is almost entirely in counterguerrilla operations, hence "counterinsurgency training" is perhaps too broad a term. The training programs for the RTA infantry have had the purpose of developing a capability for counterguerrilla warfare, i.e., Phase II counterinsurgency. It is no criticism, however, to remark that this training has little application to the preparatory, pre-guerrilla-warfare activities of Phase I in which the insurgent effort is political and organizational to develop the popular base. To get some perspective on the training role of the 46th SF Co it is necessary to contemplate briefly the organization, under the Chief of Mission, of US advisory activities in countering insurgency in Thailand.

The Minor Counterinsurgency Advisory Role of JUSMAG

(U) ~~(S)~~ Instead of relying on a Country Team to assist him in counterinsurgency matters, the Ambassador has employed a Special Assistant for Counterinsurgency to coordinate the planning and programming of all US agencies. He is a civilian and is well qualified for the position.

(U)

TABLE 12

46th SF Co Unit Designation and Reporting List, 1 April 1967[a]

Unit designation	TOE	Town and coordinates	Authorized[b]			Assigned PCS			Remarks
			Off	EM	Total	Off	EM	Total	
46th SF Co, 1st SF, Det C-401	MTOE 11-107	Lopburi (QB7031)	28	128	156	23	157	180	2 OR on leave.
TF Slick		Chonburi (QD1570)				8	10	18	CONUS REARBCE (RVN) inf training
Det CTF Slick		Kokethean (QS4170)				1	5	6	REARBCE (RVN) arty training
Det CTF Slick		Saraburi (QS0500)				1	4	5	REARBCE (RVN) cav training
Det CTF Slick		Ratburi (XQ8807)				1	5	6	REARBCE (RVN) engr training
Det B-1610		Nam Pong Dam (UD9276)	14	57	71	9	15	14	
Det B-1620		Nong Takoo (QS2815)	14	57	71	7	18	25	
Det B-1630		Ban Kachong (XB2615)	14	57	71	4	26	30	
Det A-1622		Lam Sak (QU4956)				2	10	12	
Det A-1623		Khao Yai (XQ8162)				2	10	12	
Total			70	299	369	58	280	338	

[a]Based on 46th SF Co, "Unit Designation and Reporting List," USARSF "FIRAL" dtd 19, 1 Apr 67.
[b]The differences in authorized and actual strength are due to an increase to 12 training locations (not all are shown) of which only 4 are permanent. Other differences are the result of special training missions and a shortage of 12 officers and 19 enlisted men.

CONFIDENTIAL
UNCLASSIFIED
CONFIDENTIAL
UNCLASSIFIED

UNCLASSIFIED

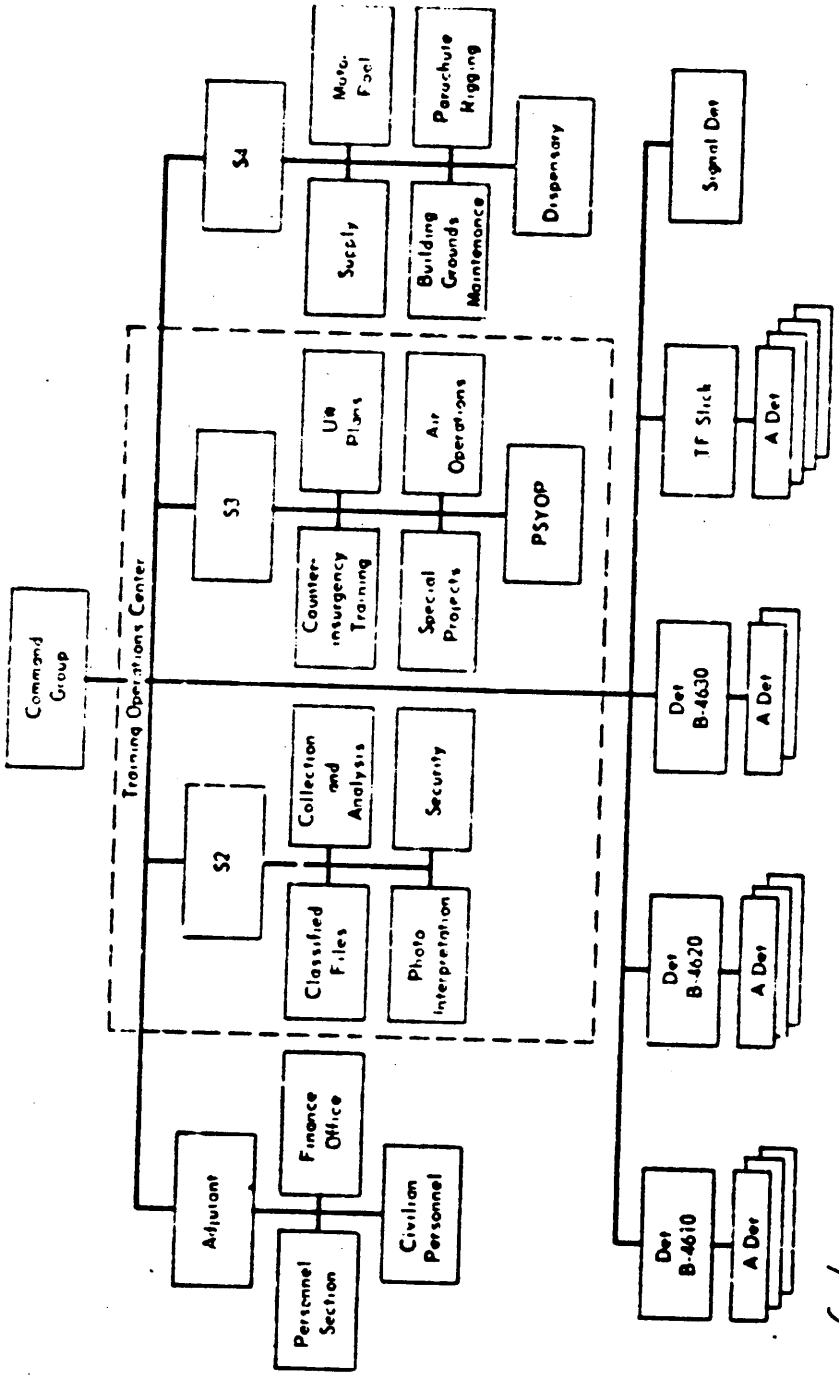

Fig. 27—Organization of 45th SF Co, July 1967

UNCLASSIFIED

(U) ~~(S)~~ The RTG regards the National Police as its first line of defense against internal aggression. When the insurgency in the Northeast appeared to rise to the threshold of Phase II in December 1965, the RTG formed CSOC at the national level and the CPMs at province level to exercise civil governmental control of counterinsurgency operations. The RTA was regarded as a counterinsurgency asset—but only that. It did not direct the effort. MACTHAI JUSMAG through the 46th SF Co developed the counterinsurgency capability of this asset and others, but since no USASF personnel could accompany the units they had trained into the field and because no US Army advisers were attached to CSOC or the CPMs (although there is one US liaison officer at CPM 1), MACTHAI has had virtually no influence on counterinsurgency operations. The situation frustrated US Army advisers who were sidetracked. There is no question that the US police advisers of USOM, other US agency personnel, and even the operations researchers under ARPA have been closer to the situation in the Northeast and are thus in a better position to influence counterinsurgency plans and operations, both within the US Mission and in relation to CSOC.

SUMMARY COMMENT

(U) ~~(S)~~ MACTHAI JUSMAG has been excluded from any official contact with RTA counterinsurgency operations, and its advisory function in this regard has been nil. This is the result of policy decisions at the level of the US Diplomatic Mission and the RTG. Through its training asset, the 46th SF Co, however, the Army Advisory Group has a predominant role in training the RTA for counter-guerrilla operations.

(U) Figure 28 is a simplified chart of MACTHAI-JUSMAG command structure. The US command structure underwent a change on 1 January 1967 when US Army Support Command, Thailand (USARSUPTHAI), a newly created headquarters under the command of USARYIS and operational control of COMUSMACTHAI, formally assumed command and/or operational control of all Army troops in Thailand. Among other subordinate organizations affected was the 46th SF Co, command of which was transferred from USARYIS to USARSUPTHAI with MACTHAI exercising operational control. This arrangement paralleled closely the system devised in Vietnam in the early 1960's when USASF were placed under the command of US Army Support Command, Vietnam later to become US Army Vietnam (USARV), while remaining under operational control of MACV.

(U) ~~(S)~~ The insurgencies in the Northeast and the South, and most recently the signs of trouble in the North, ensure a continuing requirement for the presence of the 46th SF Co in Thailand. For some time to come the Thai infantry and other counterinsurgency assets will require intensive refresher training on at least a biennial cycle. This should keep the company fully employed. This unit is carrying out its mission most effectively and is beyond the slightest doubt a key factor in the US/RTG counterinsurgency program.

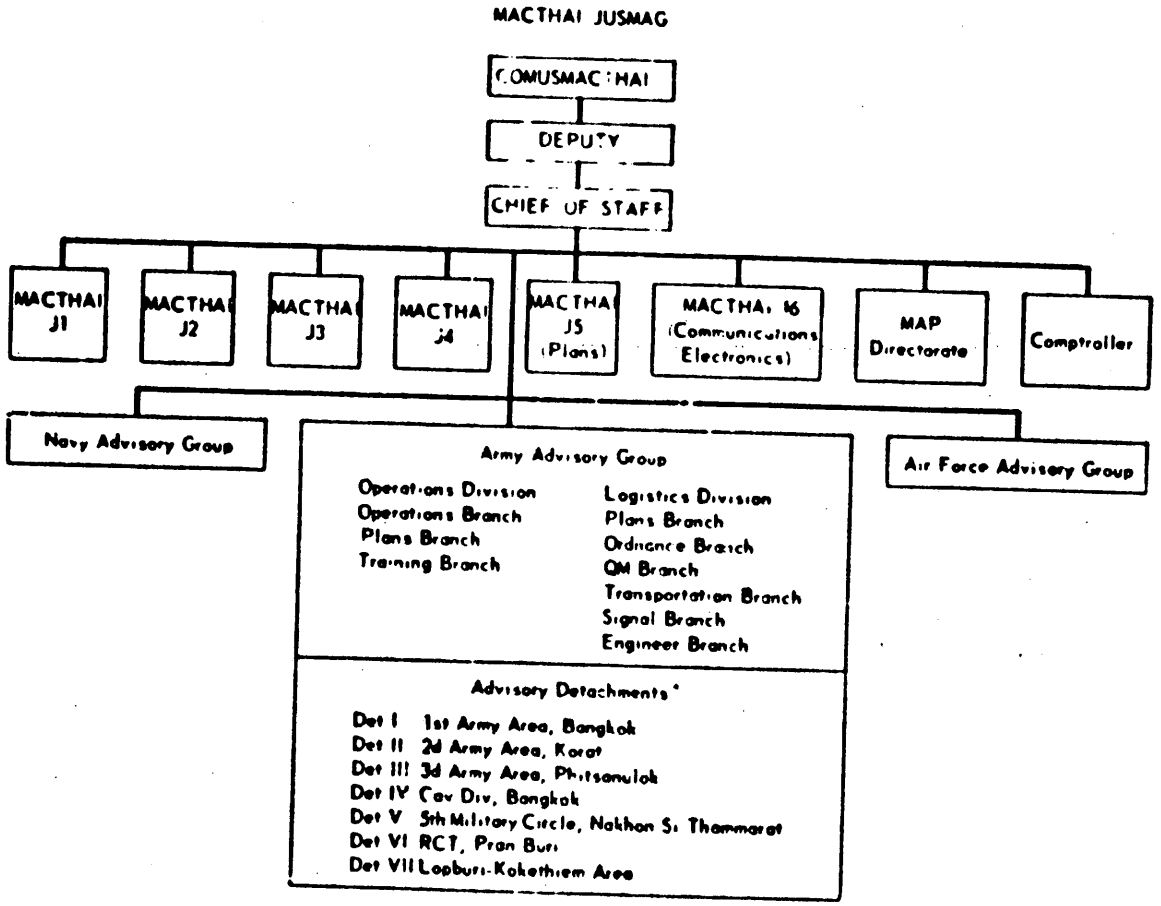

(U)

Fig. 28—MACTHAI JUSMAG Command Structure

*Army area detachments have subdetachments at RCT locations (see Fig. 22).

Chapter 19

PROBLEMS AND SOLUTIONS

(U) ~~(S)~~ The basic problem of the Army Advisory Group of JUSMAG, USMACTHAI, is not within its power to solve. The Thai counterinsurgency effort in the Northeast is directed by the Communist Suppression Operations Command (CSOC), an agency of the RTG specially created for the purpose, ostensibly independent of the Ministries of Defense and Interior but vested with the authority to levy and dispose their counterinsurgency assets and to conduct operations with them. GEN Praphas Charusathien, who commands CSOC, is Deputy Prime Minister, Minister of the Interior, and Commander of the Royal Thai Army (RTA). He brings the prestige and authority of the second most powerful man in the kingdom to the task of commanding CSOC, his own creation. He experiences little difficulty in obtaining the military and police assets he needs.

THE MASTER PROBLEM

(U) ~~(S)~~ The fundamental problem and frustration of COMUSMACTHAI and the Army Advisory Group of JUSMAG with respect to the ongoing insurgency began with the creation of CSOC and the decision of the Ambassador to assign liaison with CSOC to personnel of another agency. Thus, although COMUSMACTHAI may properly contact GEN Praphas as commander of the RTA, the former may not properly advise the latter in his capacity as commander of CSOC. The Army Advisory Group has no contact with CSOC in Bangkok. Only since January 1967 has one US officer of field rank been assigned to CPM 1 in a liaison capacity.

US ARMY SPECIAL FORCES PROBLEMS AND SOLUTIONS

(U) This study is not concerned with the principal task of the Army Advisory Group—to advise the RTA in its role of a conventional force with the mission of defending the country against invasion—but only with the internal defense and counterinsurgency training through the USASF mobile training teams (MTTs) that JUSMAG obtained from 1962 to 1966 and, since September 1966, the 46th SF Co. Having noted the major obstacle, which is beyond the power of COMUSMACTHAI to remove, the remainder of this chapter is devoted to the problems of the 46th SF Co and the MTT that preceded it.

Det C-101-A (Prov)

(U) In his after-action report[38] the detachment commander carefully defined the problems he had encountered during the combined Thai/US Special Forces training effort and made recommendations that were in some instances applicable to the 46th SF Co, in others to future MTTs comparable in size and mission to Det C-101-A (Prov).

(U) (~~C~~) Lack of a Joint Implementing Agreement. No such agreement existed to support the operations and training of the Combined Special Forces Training Base (CSFTB). There was no written guidance to govern combined staff procedures; the extent of support to be provided by Thai and US agencies was never fully defined. This resulted in each requirement's being considered in the light of how much support US channels could provide, largely because of the inflexibility of Thai funding procedures. The MTT drafted such an agreement and a letter of instruction and forwarded them to MACTHAI/JUSMAG, but, although the drafts were staffed, no action was taken.

(U) (~~C~~) Dual Assignment of Thai Command and Staff Personnel. RTASFG operational commitments in the Northeast and other RTA requirements caused such a shortage of personnel that key Thai officers assigned to the CSFTB could not be relieved of duties within the Thai Special Forces Group headquarters. Thai participation at staff level was therefore minimal. Det C-101-A (Prov) recommended that the 46th SF Co continue the combined headquarters structure but that the RTASFG be required to assign full-time staff personnel to the CSFTB.

(U) Insufficient Personnel To Permit Reassignment. During the 18 weeks in which the operational A detachments were combined, personality conflicts developed that could have been avoided by reassignment, but Thai and American manpower was insufficient to permit this. It was recommended that when practicable US units deploying for an extended period of combined operations be provided a 10 percent replacement filler pool.

(U) Inadequate Typing Skills. The MTT had three US clerk typists, but Thai Special Forces clerks could not be permanently assigned. Two civilians were hired, but the total was inadequate for reproduction requirements. Not only did all directives and instructional material within a combined unit have to be printed in two languages but most correspondence to higher headquarters as well. The paperwork was virtually doubled and in addition there was the routine personnel administrative correspondence to the parent unit. The number of typists available actually exceeded the number recommended in staffing guides, but the workload was excessive. The MTT recommended that a bilingual requirement be considered in planning future MTT and CSFTB organizations and that each staff section be provided its own typing capability.

(U) (~~C~~) Lack of Air Force Liaison. The CSFTB had to rely on Royal Thai Air Force (RTAF) support. The difficulties experienced in obtaining aircraft illustrate the type of obstacle that cannot be foreseen in planning and organizing a combined unit. A parallel dual-request system was used. The original was processed through Thai channels and a duplicate was submitted through US channels to the USAF Advisory Group of JUSMAG, which in turn placed it in Thai

channels at the Air Operations Center (AOC) in the hope of facilitating early scheduling of aircraft. The hope was not realized because the RTAF invariably delayed final action until the original, moving more slowly, reached the AOC. The RTAF gave low priority to these requests. This, together with faulty procedures and the rigidity and inflexibility of the two Thai services, resulted in a discouraging 75 percent cancellation or denial of air support for scheduled training operations. The CSFTB requested that Thai and US air liaison officers (ALOs) be assigned to remedy this situation, but the request was disapproved. The MTT recommended that in future combined operations an air liaison element be provided.

(U) Lack of Established Logistic Support Channels. Most in-country support was provided by the 9th Log Comd with MACTHAI J4 acting as the coordinating link. The MTT sent its requirements to J4 who piecemealed them to appropriate support agencies and usually authorized the MTT direct coordination with the appropriate agency. The result was that MTT S4 personnel spent much of their time contacting numerous supply agencies, most of them organic to the 9th Log Comd. The arrangement was unsatisfactory. The supply agencies understandably gave priority to their normal direct-support missions. To rectify the situation, the MTT suggested that it be attached to the 9th Log Comd. COMUSMACTHAI approved and orders were published. A sort of step-parent interest on the part of the 9th Log Comd was thus induced with the result that MTT requirements received more timely consideration. One office in the 9th Log Comd (Director of Services, Supplies, and Maintenance) was designated as coordinator of all MTT requests. The MTT recommended for future efforts of its kind that early consideration be given—preferably in the predeployment phase—to designating a single subheadquarters to coordinate MTT in-country support requirements and that the MTT be attached to that headquarters on arrival.

(U) Lack of Secure Communications. During the planning phase a requirement was established for a secure teletype and telephone link between Camp Pawai, near Lopburi, and Bangkok/Korat. It was decided to integrate the CSFTB with the countrywide VHF net, using Thai units to install the equipment. Because of various delays COMUSMACTHAI directed in May 1966 that US signal personnel install the equipment. This was done but siting problems caused the system to operate inefficiently. In August 1966, at the end of the MTT tour, a duplicate system installed by the RTA Sig Bn became operational, but it also proved unreliable and the need for a relay site was realized.

(U) At midpoint of the tour, a radio teletype (RTT) system, organic to the MTT was installed at Bangkok to alleviate the interheadquarters communication difficulty. It operated satisfactorily, and a large volume of traffic was transmitted by it for 6 weeks before training support requirements required its deactivation. As for telephone communication, 46th SF Co personnel were still bellowing over the instruments in Lopburi in May 1967 trying (often in vain) to make themselves understood. The experience illustrates that the requirement for secure and dependable communications between headquarters must be met from the outset and that necessary coordination to include funding must be completed well before planned installation dates. Det C-101-A (Prov) recommended that an MTT of its kind be provided with adequate RTT equipment to install a secure backup system between itself and its primary headquarters.

The 46th Special Forces Company

(U) The 46th SF Co is the first USASF company to be independent of a group and to organize a Special Forces Operational Base (SFOB). It was fortunate to have had the MTT as its precursor to break the ground and establish the precedent of a close working relation with the RTASFG at Lopburi. Although the missions of the two organizations differed, the operational environment and the counterparts were virtually the same. The decision to deploy the 46th SF Co to Thailand was firmed soon after the MTT began its tour there. This was fortunate in that the projected arrival of a USASF company in PCS status became an attendant factor in the MTT's attitude toward its own task and its recommendations with respect to counterinsurgency training for the RTA. The MTT's prior presence and its assessments of its own experience and the caveats it could pass on to the 46th SF Co were central to getting the latter off to a smooth start. Nevertheless some problem areas merit discussion.

(U) ~~(S)~~ Forbiddance To Go into the Field. USASF officers deplore not being permitted to accompany the units they have trained into the field during the 5-week posttraining operational phase under CPM 1. Their RTASF counterpart trainers, however, can and do observe the companies in this phase. Their evaluation of performance should be adequate for the purpose of modifying subsequent schedules to correct deficiencies that develop because of insufficient emphasis on certain aspects of training.

(U) ~~(S)~~ It would indeed be surprising if USASF officers did not wish to get into the operational environment, but the reason advanced to justify this is equivocal. To allow it on an occasional special-request basis might do no harm and would afford those responsible for the formulation and execution of training programs an opportunity to assess the adequacy of training in terms of content and length. To assign US Army advisers, however, on a permanent basis to RTA units committed to active operations might do a great deal of harm. The RTA is not the ARVN. It has good discipline. The officer corps is well schooled and has a proud tradition. The US officer accompanying a Thai unit in the field as an observer would likely be impelled to expand his role to that of adviser and to ask for parallel US communications and US NCO assistants as in Vietnam. Many US officers in the Army Advisory Group may believe that such an expanded role is now necessary. If this view is accepted (that the RTA is not competent to conduct its own battalion- and company-sized operations unadvised) a serious question arises as to what US advisory and training assistance has accomplished during the past decade.

(U) ~~(S)~~ Intelligence. Paradoxically the 46th SF Co is forbidden to collect intelligence but is expected to report what information of value comes its way and even to take steps to see that some of it does. The RTASFG headquarters at Lopburi has no intelligence-evaluation function. RTA officers keep a watchful eye on their US counterparts for any tendency to independent collection, and in fact the US intelligence advisory effort in Thailand has not been conspicuously successful because of Thai reluctance to permit US officers much contact with intelligence operations. This has been much less of a problem to the personnel of another US agency who advise the Thai police.

(U) ~~(S)~~ In 1962 when the RTG was taking a heightened interest in counterinsurgency and USASF MTTs were brought in to instruct the RTA infantry and

Border Patrol Police in small-unit counterguerrilla techniques, 22 US Army intelligence officers were brought to Thailand. The RTA was suspicious and did not permit them to do anything much for several months. At last, four of them were allowed to go to the 3d Army area, but they were later withdrawn, and there have been no US military intelligence advisers outside Bangkok since.

(U) (S) In 1967 a JUSMAG intelligence adviser was assigned to each of the Thai armed services. Other advisers were posted to the Armed Forces Security Center in the Ministry of Defense. This center is charged with teaching intelligence to personnel of all the armed forces. There was also an intelligence adviser/ liaison officer to J2 of Supreme Command Headquarters and the Armed Forces Intelligence Center. There are US civilian intelligence advisers at CSOC in Bangkok and at CPM 1 in the Northeast, but no military advisers. MACTHAI and the 46th SF Co are outside the mainstream of internal defense intelligence and have no direct advisory role.

(U) (S) In the autumn of 1966 the Thai High Command became concerned about the results achieved by the intelligence agencies of the armed forces and requested US assistance in developing their intelligence capabilities. The Joint Chiefs of Staff (JCS) noted in a memorandum to the Secretary of Defense, "This is a welcome and significant departure as earlier US offers of assistance had been repeatedly declined."[32] Nothing seems to have developed from this, however, in the way of an increased training and advisory role in internal defense intelligence for the Army Advisory Group. The response may have come from another agency. Admittedly there is only a limited role for combat intelligence in Phase I insurgency. Conventional US military intelligence methods are applicable to Phase II but have little to contribute to the problem of creating an informant capability within the population, the basis of Phase I internal defense intelligence.

(U) (S) The growth of the insurgency in Thailand shows clearly how a host-country army begins to take on an internal defense mission. As it does so, it becomes a consumer of internal defense intelligence. It, together with others, should also be a collector and producer of such intelligence from the time that it takes the field. It cannot hope, however, to accomplish a mission for which it lacks a capability. To the extent that RTA capabilities are and will be the product of US advice and training, the US military assistance effort in Thailand will remain inadequate so long as it does not provide internal defense intelligence training to RTA units committed to internal defense operations.

(U) (S) Control of Training. A previous study (RAC-R-32[11]) concluded that US "command control" of cadre and unit training in developing countries is an essential prerequisite to successful accomplishment of the training mission. Little is apt to be accomplished by sending an MTT to train a unit in the field or even at its home station. Local command requirements and barracks routine interfere with training schedules; enlisted personnel are assigned to fatigue parties; and officers have administrative duties or simply do not attend. It is much better for the US training asset to establish its own site in-country and to move indigenous units away from their home stations for the training cycle. In this way they come under actual if not nominal US control at a location where there are no dependents and no unexpected demands from parent headquarters. This is the only setting for intensive training that guarantees minimum interference and maximum participation.

(U) ~~(S)~~ The 46th SF Co has achieved this. B detachment training sites are in remote areas. An RTA company programmed for counterinsurgency training is moved to a training site after the Thai/US training team that will take it through the course has spent a week with the unit at its home station to give it preliminary instruction and to ensure that it will arrive properly equipped. The RTA does not relinquish command of the company during its training. The US B detachment commander's Thai counterpart is in command, but the training effort is so well integrated that command control of training by USASF is virtual.

(U) Predeployment Training for Replacements. The requirement for replacements for the 46th SF Co in the autumn of 1967 could be clearly foreseen and planned for. The Special Warfare Center (SWC) at Ft Bragg could procure the personnel required, program their training specially for the task in Thailand, and schedule replacement of the entire company (less a few individuals who extended) in three monthly increments. Headquarters SWC designated B Co, 7th SFGA, to train replacements for the 46th SF Co. Personnel were selected from throughout the Center, preferably veterans of Vietnam.

(U) ~~(S)~~ Rapport. There is a noticeable affinity between Thais and Americans. They socialize together after duty hours. Rapport is as a rule fairly easy to establish; however, the Thai officer may give the US officer the impression that he has accepted his advice without entertaining any intention of acting on it. The US adviser must take particular care to avoid the appearance of trying to usurp the command prerogative.

(U) ~~(S)~~ The 46th SF Co has established good rapport with counterparts everywhere, with one glaring exception. In one camp the senior US officer present so offended his counterpart that the latter withdrew all Thai joint training personnel from comfortable quarters in the compound to tents outside the gate, a separation that obtained during the data collection for this study and was allowed to continue for some time. The cause of the difficulty appears to have been an energetic take-charge approach on the part of the US officer who instituted little discriminations in the common camp life, favoring US personnel at the expense of Thai dignity and pocketbook. Although it was claimed that the Thai personnel carried out their joint training duties satisfactorily despite their refusal to live in the compound, it is quite clear that such a relation could not possibly be a positive factor in joint duty performance.

(U) Collocation and desk-to-desk staff integration of counterparts performing a joint training task is perhaps the best technique to adopt wherever feasible and appropriate. The language barrier is not formidable in the duty environment of the 46th SF Co. Although US personnel lack a strong language capability, they have some, and many of their counterparts speak and understand English fairly well.

SUMMARY COMMENT

(U) The USASF training effort in Thailand has been of a high order. With the single exception of the aforementioned personality conflict and its result, it is difficult to imagine how either the 46th SF Co or its predecessor, Det C-101-A (Prov), could have improved their performance or have better accomplished their mission.

PART III

Overview and Outlook in Southeast Asia

UNCLASSIFIED

Chapter 20

OVERVIEW AND OUTLOOK IN MAINLAND SOUTHEAST ASIA

BACKGROUND

(U) Communist insurgency, despite US efforts to assist friendly governments to contain it, has continued to expand in mainland Southeast Asia ever since the French returned to repossess the colonial territories overrun by the Japanese during WWII. The US government did not fully comprehend the nature of the threat until 1960, and even then continued for some time to view insurgency in Laos as one problem unrelated to another problem—insurgency in Vietnam. The Military Assistance Advisory Group (MAAG) in Saigon continued to help the Government of Vietnam (GVN) develop conventional forces to defend against direct aggression from the north, up to the time when the late President Diem, in desperation after the failure of the Regional Forces (then the Civil Guard) to preserve order in the provinces, assigned primary responsibility for internal defense to the Army of the Republic of Vietnam (ARVN). During 1961, when the US counterinsurgency effort in Vietnam began a continuing expansion whose present proportions, if predicted then, would have been regarded as preposterous, the US government resigned itself to a weak political settlement in Laos that would require the withdrawal of US advisers while North Vietnamese Army (NVA) and North Vietnamese-cadred Pathet Lao troops remained in control of three-fifths of the country.

(U) ~~(S)~~ US diplomacy has not succeeded in persuading the governments of Burma and Cambodia to accept US advisory assistance in countering insurgency, although the former has had to contend with separatist tribal movements and low-key communist subversive efforts since independence, while the NVA and VC freely use Cambodian territory as a sanctuary. In Thailand, the showpiece of US economic and military assistance, the lessons of Vietnam have not gone entirely unheeded. The Royal Thai Government (RTG) with US advice and assistance began to plan and unhurriedly to implement counterinsurgency programs in 1962, but the effort was halfhearted for two reasons: (a) the Thai economy was advancing steadily with US economic assistance, and the government was reluctant to allot funds to support counterinsurgency programs not directly contributing to economic growth (e.g., improving the Provincial Police), and (b) the threat in the Northeast was officially regarded by both the US and RTG as minor until the outbreak of guerrilla warfare coupled with an increasing use of terror necessitated firm action in December 1965.

UNCLASSIFIED

CURRENT SETTING

(U) Vietnam, 1956–1964, is an example of a failure of US overseas counterinsurgency in the usual meaning of the term, i.e., helping a friendly nation defeat an insurgency by providing US military assistance to include, if required, operational advice and combat support but short of committing US combat forces. No one can seriously doubt in retrospect that at best the 10 northernmost provinces of the Republic of Vietnam (RVN) and at worst the entire country would have fallen to communist control by the end of 1965 if the US had not committed combat forces in the spring of that year to restore the deteriorating military situation. The magnitude of the military effort that may be required to crush an insurgency that has succeeded in building a broad popular base is now evident—especially when the target country is situated on the communist periphery or flanked by "neutral" underdeveloped countries that afford sanctuary to the insurgents and that tactical elements of the communist sponsor can freely transit with or without the consent of the governments concerned.

(U) A substantial part of Laos is controlled by the communists. They maintain extensive base areas in eastern Cambodia. Insurgencies threaten Northeast and South Thailand. The "favorable factors" that invite communist subversion are clearly identifiable in Burma. A mutual antagonism between Rangoon and Peking became evident in mid-1967. In January 1968 the press carried reports from diplomatic sources in New Delhi that Chinese advisers were infiltrating upper Burma to work with the Kachins.[40] British protection is to be withdrawn from Malaysia in 1971. With the exception of the latter, China and North Vietnam can easily infiltrate men and supplies to all the countries of mainland Southeast Asia.

OUTLOOK

(U) ~~(S)~~ The current setting suggests the probability of a long Type II* low-intensity conflict that will be defeated at that level without intensifying to Type I, with the US in a major advisory and supporting role in some or all of the countries mentioned, although Thailand is the only country in which the US currently has such a role. Whether Burma and Cambodia will opt for the Free World probably depends on how the governments of those countries gage the wind. If they become convinced that significant US assistance can keep Southeast Asia free, they will surely request it. Malaysian attitudes toward US assistance when Britain withdraws her forces are mixed, for, although the Indonesian

*The US Army Combat Developments Command defines this as, "stability operations involving US advice and combat support for indigenous allied forces engaged in establishing, regaining, or maintaining control of land areas threatened by guerrilla action, revolution, subversion, or other tactics aimed at internal seizure of power." This corresponds to the first two phases of counterinsurgency up to the threshold of mobile warfare. If the insurgents believe themselves strong enough to progress to that final stage, it is then apt to be necessary for the US to accept failure or commit its own combat forces and engage in Type I low-intensity conflict.

threat has subsided, there remains the threat posed by a possible return of the communist terrorists (CTs) in southern Thailand.

Implications

(U) Despite the misgivings of significant elements of the US population with respect to the US commitment in Vietnam, there is little doubt that the American people would approve their government's extending or intensifying support and advisory assistance, short of the commitment of US combat forces, to any developing country seriously threatened by communist insurgency. Victory in Vietnam is regarded by some as an eventuality that will deter the communists from attempting subversive insurgency in other countries. This may be wishful thinking since the outcome is uncertain. It is more realistic to regard Vietnam as a failure of a US counterinsurgency advisory effort, a failure that can be overcome only by US engagement in limited war.

(U) The likelihood is that for decades the US will be engaged here and there—as it is in Thailand currently and was in Vietnam before 1965—in assisting developing countries to contain communist-supported insurgencies at low-intensity counterinsurgency levels, it is hoped without having to commit US troops to prevent communist takeover. This prospect appears much more likely in mainland Southeast Asia than the realization of the optimistic hope that the communists will be deterred from pursuing their goals in Cambodia, Laos, Thailand, and Burma by a US/GVN victory in South Vietnam. From a US foreign policy standpoint, given continuing insurgency elsewhere in Southeast Asia after Vietnam, the task is to prevent insurgency from rising to the dismal level where it becomes a question of abandoning a country to communism or committing large US combat forces. It is suggested that the role of USASF elsewhere in Southeast Asia in the years ahead will be similar to that in Vietnam before, rather than since, the introduction of US combat troops.

(U) There is no role for US combat units in Phases I and II counterinsurgency (below the threshold of Type I low-intensity conflict). The vital role belongs to the US adviser in training indigenous troops in counterguerrilla operations, in advising and supporting indigenous units committed to such operations, and in developing the potential of Hill Tribes and other minority groups into counterguerrilla assets for denial and remote-area stabilization operations.

(U) ~~(S)~~ The impact of the US combat presence in Vietnam has been central to the growth and increased effectiveness of 5 SFGA. Although the requirements of US combat forces in Vietnam broadened and expanded the CIDG program and created a greater demand for special operations, the 5 SFGA and its indigenous assets (except in the Delta) have increasingly played an auxiliary role to US combat forces in the setting of Type I low-intensity conflict. Further, joint operations with US units, especially in II and III CTZs, tended to divert CIDG operations from the local security mission and the other activities of area development in assigned tactical areas of responsibility (TAORs) to tasks ancillary to the operations of conventional forces against Main Force VC and NVA units.

(U) There may be a slight pitfall to avoid here in pondering the experience gained during the period of joint or concurrent operations with US combat forces. Lessons learned in the recent context of Type I low-intensity conflict (Vietnam after mid-1965) may not be transferable in their entirety without some qualification to future Special Forces commitments in the context of Type II.

Chapter 21

SUMMARY DISCUSSION

(U) This section recapitulates the salient points relating to new tasks, techniques, and other developments addressed in earlier chapters that, in the premises set forth in the previous section, lead to the major conclusions.

PREMISSION TRAINING AND DEPLOYMENT

(U) As late as June 1964 most Special Forces officers would have condemned any proposal to abandon the system of replacing an integrated detachment at the end of its 6-month TDY tour with another detachment similarly trained and area-oriented for several months before deployment. But with the change to PCS and a 12-month tour it was mandatory to adopt an individual replacement system.

(U) This required the Special Warfare Center (SWC) at Ft Bragg to shift from training the individual as a permanent member of a team to training him simply as an MOS. Although the team environment was simulated in training, the new Special Forces soldier going to Vietnam as a replacement got his first real team experience in a combat environment. Actually this was no more than returning to the replacement system the US Army has used in wartime since WWI.

(U) Formerly too much value may have been placed on the team cohesion developed during predeployment training. The new system, even with considerably more shifting about of personnel in-country than had been anticipated and with detachments operating understrength, may have lowered their operating efficiency to some extent in comparison with the old TDY detachment, but if so it was only to an acceptable degree. The old system, despite obvious advantages, had one serious fault that could not be corrected. When a replacement team arrived to relieve a team on site, the continuity of the effort suffered severely since the accumulated experience and knowledge of the old team in counterpart relations, combat experience, intelligence contacts, and intimate knowledge of the terrain and the local population was temporarily lost.

(U) In theory the statistics of individual rotation suggest the possibility of an ideal continuity of experienced collective effort in the A detachment for an indefinite period. Disregarding a small normal attrition from all causes other than rare instances when severe casualties might result from a heavy enemy

RAC

assault on a camp, it appears that a 12-man team could be scheduled to have one member replaced each month, or three each quarter. In actual practice this system could not even be approached.

(U) The common belief that 12 months of continuous duty in a Civilian Irregular Defense Group (CIDG) camp is too much for the US soldier is debatable, but there are compelling reasons for programming regular in-country rotation quite apart from the flexibility in personnel assignments imposed by the continuous growth and diversification of effort characteristic of 5 SFGA. For one, it is desirable for all officers below field rank and most enlisted men to serve part of their tour in an A detachment. Thus, in addition to the general attitude that 6 months in a CIDG camp is long enough, ther requirement to rotate personnel between the control elements and the A ments. The requirements of additional special operations units and Mob. Strike (MIKE) Force companies during FY67 drew on fixed personnel assets to the point where most A detachments in CIDG camps were understrength. The typical A detachment in the spring of 1967, from the aspect of the aggregate age of its members and their length of service together, afforded a sharp contrast to a 1964 detachment, but it could perform its task adequately.

(U) The expansion of 5 SFGA at the same time that personnel requirements of the Army as a whole were increasing to support the buildup in Vietnam resulted in the entry at the SWC, Ft Bragg, of a higher proportion of younger and less experienced men, both officers and enlisted personnel, than formerly. Coupled with the accelerated promotion characteristic of emergency expansion, this resulted in the assignment of some officer and enlisted personnel to 5 SFGA whose grade and MOS rating were somewhat inflated, i.e., they were not as well-qualified as their predecessors.

(U) On the other hand, in the judgment of some senior officers with years of experience in Special Forces, many of these younger and less-experienced men possessed intelligence, motivation, and basic ability reflecting a potential equal or superior to that of many of the old-line Special Forces types. This phenomenon has historically been a characteristic of the wartime expansion of the US armed services generally, and this is fortunate because the basic and specialist training of new personnel is inevitably shortened and intensified during periods of emergency expansion. The professional NCO corps also suffers as the best individuals are screened out for Officers Candidate School (OCS) or direct commissions. The result is that, in a context of actual (rather than simulated) combat, replacements are less thoroughly trained and serve under less-experienced NCOs than in peacetime. Early in 1967 the SFGA was concerned not about the quality of arriving replacements but rather about the thoroughness of their training. It became necessary to screen new arrivals at group headquarters in order to set up special training classes and to be selective in making initial assignments so that optimum use of available assets was ensured and assignment of underqualified individuals to difficult or demanding positions was avoided.

COMMAND, CONTROL, AND COORDINATION

(U) The US buildup required subordination of the MACV advisory/ARVN command structure in the three CTZs in which the Marine Amphibious Force

and the two Army Field Forces were deployed. This was easily achieved by assigning the US force commanders additional duty as Corps Senior Advisers (CSAs) and reducing the former CSAs to deputies. This enabled the US force commanders not only to advise their counterpart Army of the Republic of Vietnam (ARVN) corps commanders (they had little time for it) but also to coordinate the planning and conduct of ARVN operations including those of CIDG strike forces to the best advantage of US operations.

(U) The net effect was to make CIDG operations, except in IV CTZ, subordinate and complementary to those of US divisions and separate brigades. The role of USASF/VNSF/CIDG became one of finding the enemy and helping to fix him. One US field force commander (LTG Stanley R. Larsen) stated that almost every major operation that developed during his 2 years in Vietnam resulted from North Vietnamese Army (NVA) preparations to attack a CIDG camp whose A detachment reported developing indications of the enemy buildup in time for reaction force planning to anticipate the event.

(U) By 1966 camp strike forces were being increasingly diverted from counterguerrilla operations and other normal stabilization activities in their tactical areas of responsibility (TAORs) to perform tasks in support of conventional operations of US troops against VC/NVA Main Force units. By 1967 in II and III CTZs they came under the operational control of US Army units most of the time.

(U) Within 5 SFGA the command structure had been changed during FY67 but had reverted to the previous system under the next commanding officer. The post of group executive officer had been abolished and the command function organized into Counterinsurgency, Special Operations, and Administration and Logistics—each headed by a deputy commander. The system worked well enough and facilitated the command administration of sensitive programs, but, in departing from the customary organization of a group command section, it had left unclear the formal designation of the second in command.

Coordination

(U) ~~(S)~~ Counterpart relations of USASF in Vietnam and Thailand present a contrast. It can be stated simply: Thais and Americans generally get on well and often seek each other's company in off-duty hours, whereas Vietnamese and Americans, although they respect one another, seldom appear to seek each other's company. However, so far as the greatest problem of the US adviser—getting his counterpart to accept and act on his advice—is concerned, the better rapport prevailing in Thailand does not seem to contribute as much as might be expected. The Thai field-grade officer frequently listens politely to the American's advice—giving the impression that he accepts it—but never acts on it.

(U) ~~(S)~~ It has been suggested that he dare not act on it because of the rigidity of the command system in the Royal Thai Army. Not only will he not depart from established procedures without explicit orders from his superiors—he dare not even suggest an innovation to his superiors because by thus intimating that he is more knowledgeable than they in some small particular he might provoke their disapproval to the detriment of his future career. This places the onus on the senior advisers and the Military Assistance Advisory Group (MAAG)

chief to influence change because it can seldom be accomplished except at the top command echelons. Similarly an adviser in the field at any level must seek the help of his own superiors whose counterparts are the superiors of the officers he is trying to persuade to act on his advice.

COEQUAL SECTOR AND SUBSECTOR ADVISORY MISSIONS

(U) Assignment of coequal sector and subsector missions is another example of the natural tendency of a higher headquarters [in this case the Military Assistance Command, Vietnam (MACV)] to divert the inherent capabilities of highly trained assets to tasks other than those they are intended to perform, when the need seems to justify such action. It is likewise another example of how quickly Special Forces detachments adapt to unfamiliar duties suddenly thrust on them. The essence of this ability to adapt and perform well is the team—not just the concept, which is common enough, but the multiskilled team in-being, trained and cross-trained and area-oriented—ready to perform the tasks for which it was structured and to adapt quickly to others.

(U) A detachments were more effective in the subsector role when under a B detachment that had the sector advisory role. In I and II CTZs there were no B detachments with coequal missions, hence the A detachment commander with coequal missions had to try to please two masters—the B detachment commander and the MACV sector adviser, each with mutually exclusive command interest in how he performed. It would be strange indeed if an A detachment commander in this position were not more responsive to his B detachment commander (in I CTZ to his company commander, since there were no B detachments).

(U) The dual role was most productive in IV CTZ where the operational demands of US combat formations did not divert the CIDG camps from their normal missions, and the B detachment commanders, by virtue of the coequal missions, could coordinate intelligence collection and counterguerrilla operations of CIDG, Regional Forces (RF), and Popular Forces (PF) assets.

INTELLIGENCE

(U) The most significant contribution of 5 SFGA to the war effort as a whole has been in the collection and, at intermediate levels, the processing and dissemination of intelligence on a countrywide scale.

Context

(U) In the peculiar combat environment of Vietnam the classic methods of collecting combat intelligence perfected during the wars of the past half century have not yielded much information on the location of enemy forces. Because of this deficiency the most common type of offensive operation in Vietnam (including, on a smaller scale, CIDG patrols) has been an area sweep of several days duration with an impressive new name, "search and destroy." The name has a discouraging implication, though. The word "search" is

significant. Many operations have been launched by ARVN and US forces in the hope that significant contact could be made but with only a vague suspicion that enemy forces were somewhere in the area to be searched.

(U) The problem for US forces has been to find the enemy with his forces concentrated, in order to hit him. The resort to reaction operations made a virtue of necessity. Since most of the time the enemy preserved a capability to avoid contact, advantage was taken of his initiatives when he concentrated his forces to attack a district capital or a CIDG camp.

(U) In Vietnam, informers in the rural population should be the primary source of information on the whereabouts of the opposing forces, but the VC preempted them years ago by extending a limited but extremely effective form of population control throughout the country. The application of a judicious blend of persuasion and terror effectively channeled the flow of information from the villagers to VC agents and limited the flow to friendly forces to a trickle.

Indigenous Auxiliaries

(U) In the past, Western armies campaigning and establishing colonial garrisons in Asia and Africa invariably hired native scouts and guides and raised light infantry and police units that, in addition to the combat service they performed, acted as a channel between the alien military and the people for gathering vital information. This exploitation of native assets was a conspicuous feature of opposing French/colonial and British/colonial forces during the French and Indian War (1745–1763) on the North American continent. Aside from a general knowledge of the nature of the country and the customs of the people the information sought fell into two categories: (a) combat intelligence concerning hostile armed units that operated overtly and (b) police or internal defense intelligence concerning the subversive substructure that constituted the control apparatus and operated covertly.

US Army Special Forces/Civilian Irregular Defense Groups in the Expanded Intelligence Role

(U) ~~(U)~~ US combat forces arrived in Vietnam to find that the USASF had organized and trained CIDG strike forces that could be cast in the role of indigenous auxiliary. Special Forces A detachments with their CIDG assets constituted repositories of current and retrievable information on the VC within their TAORs and the means for further collection. They were soon exploited by US Army units whose assigned areas of operation included a CIDG camp. Special Forces intelligence-collection potential was greatest in III and IV Corps where certain control B detachments also had the coequal sector advisory mission with their A detachments assigned the subsector mission as well as the CIDG mission. This situation enabled the B detachment commander to coordinate the collection efforts of all the intelligence assets of the province (including RF/PF, police, and Revolutionary Development teams) with CIDG collection and to process the information gathered from all sources at a joint intelligence center. This heightened capability benefited US combat forces in III CTZ but not in IV CTZ where they were seldom committed.

Exploitation of 5 SFGA Intelligence for the Overall Effort

(U) ~~(C)~~ In the spring of 1965 Project Delta, controlled jointly by MACV and the Vietnamese Joint General Staff, was expanding and demonstrating its capability for long-range reconnaissance missions into the war zones and other enemy-controlled territory. I and II Field Forces required such a capability to obtain intelligence on enemy locations in order to plan large operations. In 1966 5 SFGA was therefore called on to organize Projects Sigma and Omega.

(U) ~~(S)~~ The countrywide fixed pattern of 60 to 70 CIDG camps backed up by the mobility of the MIKE Forces and special operations units provided a good base for intelligence collection by ground patrols and informant nets, but few 5 SFGA intelligence personnel had the technical competence of Military Intelligence Corps personnel, and their numbers were not adequate to assume the expanded role of integrating 5 SFGA collecting, reporting, processing, and disseminating with the overall MACV intelligence operation. The additional assets required for this were provided by augmenting 5 SFGA with a military intelligence detachment and a radio research unit.

(U) ~~(C)~~ Thus the 5 SFGA became the vehicle for an intelligence operation that was meshed throughout the cycle with the countrywide MACV system, essentially to provide intelligence on which to base the operations of the US field commands, a further demonstration of USASF adaptability.

The Price

(U) ~~(C)~~ There was one major drawback, however. Until 1967 the intelligence effort, except in the Delta, became increasingly oriented toward locating and tracking Main Force VC and NVA units—the targets of US combat forces—and away from internal defense intelligence targets—the local guerrilla and VC political substructure within the TAORs.

(U) Unquestionably the clearest manifestation of the effect of the US buildup on 5 SFGA was this diversion of effort away from area development and its exploitation to serve the combat intelligence needs of allied forces as a whole. This was an expedient use of an asset by MACV to meet a need of the effort as a whole, and, as such, its wisdom is not open to question. The important thing to remember is that it was an expedient justified in the premises but not necessarily one to emulate or contribute to any future doctrine save in the special circumstances of Vietnam.

CIVILIAN IRREGULAR DEFENSE GROUPS COMBAT OPERATIONS

(U) Until the third quarter of 1965 CIDG operations remained much the same as during the 1961–1964 period. The US buildup stimulated the growth of the CIDG program by providing more air and logistic support, reaction forces, and intelligence augmentation to back up the demands that US forces made on it. With expansion and increasing operational effectiveness, however, the CIDG assets assumed an auxiliary role similar historically to that of the native auxiliaries invariably raised by Western armies when they campaign in underdeveloped areas. In IV CTZ, and to a lesser extent in I CTZ, CIDG operations retained the former pattern, but in II and III CTZs the two Army

field force commands, exercising operational control, made strike force operations largely ancillary to their own operations. This appears to be a natural development to be anticipated when a counterinsurgency effort progresses from Type II to Type I low-intensity conflict and may indicate a new role for USASF in this context that should be recognized.

SPECIAL OPERATIONS

(U) Although special operations of a minor scale were undertaken by USASF in Vietnam before the organization of 5 SFGA, it was the creation of Project Delta in 5 SFGA, and later Sigma and Omega, that provided a real capability. The intelligence requirements of the US field forces gave added impetus to the development of irregular forces capable of penetrating the war zones and secret base areas of the enemy.

(U) Three major requirements existed for this capability: (a) intelligence, (b) denial to the enemy of certain human and material resources, and (c) recovery of friendly personnel missing in action. Operations were of two principal types: long-range reconnaissance patrols and mobile strike operations for extended periods—both in hostile-controlled territory. Highly skilled techniques were developed for infiltration and extraction.

Command and Control

(U) In Vietnam and Thailand, Special Forces have occasion to interact with the other Armed Services and operating agencies of the US government. In the course of performing the research for this study the RAC study group indirectly acquired data indicating that the requirements for interaction give rise to substantial questions concerning alternative organizational arrangements to accommodate the process. In the view of the study group the questions are sufficiently important to warrant further research and analysis.

LOGISTICS

(U) The 5 SFGA logistic system continued to function well. The establishment of a vast US Army logistical support system in Vietnam made practicable a shift to in-country supply sources for many common items. Decentralization was accomplished by creating Forward Supply Points (FSPs) stocking 15 days of supplies under the S4 sections of the letter companies in each CTZ. Advantage was taken of the clearing operations of US troops in II and III CTZs to ship more cargo by surface means, using a combination of water and road transport, from Nha Trang to the FSPs and also directly to them from Okinawa. There are no obvious lessons learned or particular criticisms to be made about the organization and operation of the 5 SFGA logistical support system.

COMMUNICATIONS

(U) As 5 SFGA expanded, radio communications requirements became proportionately greater with the increasing scope and scale of operations. The

introduction of the letter companies into the group structure, the assignment of the coequal sector/subsector missions and the buildup of US forces contributed to a continually increasing traffic load. This was compounded by the growing demand for more administrative reports of headquarters at all levels, lateral and parallel command channel coordination with other agencies, service traffic, and relay service for other units.

(U) Many new models of radio sets were concurrently introduced during the period. Most of them were improvements over earlier models in common use but were not altogether without their own limitations. Instead of a general replacement of the old by the new, both continued in use with the result that as time went on an extraordinarily large number of different models were included in the active inventory.

(U) By mid-1967 it appeared that the communications of 5 SFGA would benefit from a careful systems analysis aimed at reducing the administrative reporting load of 5 SFGA by clearly distinguishing between legitimate USASF traffic and that which should properly be handled by the communications facilities of other organizations, as well as eliminating a considerable number of the many models in use. The communications resources of the group have been criticized as unnecessarily lavish, but it was demonstrable in 1967 that the system was used to capacity. There may be a deleterious effect of a corollary of Parkinson's law at work here: viz, no matter to what capacity military communications facilities are increased, the traffic load will inevitably build up to a level of overuse. There surely is an optimum rate of flow of administrative traffic in a given situation that need not be exceeded. Analysis might reveal a considerable exchange of purposeless information that cannot properly be considered (in the broadest sense of the word) communication.

MEDICAL

(U) ~~(S)~~ The activities of 5 SFGA medical personnel in the CIDG camps and on off-site operations were virtually the same as in the earlier period (1961–1964), but, at company and group levels, USASF initiative achieved needed improvements in the hospitalization and treatment of sick and wounded CIDG personnel. Because they were irregulars and not members of the armed forces but on the other hand did not appear to be civilians in the eyes of a Vietnamese hospital administrator, both military and civilian hospitals often refused admission to CIDG personnel. If admitted, the strikers—especially Montagnards—were often neglected, and when sent home they were kept on the hospital rolls as outpatients for excessive periods of convalescence. This situation was rectified first by persuading certain US military hospitals to accept CIDG patients and then by building small hospitals at the letter-company locations staffed by USASF medical personnel on an additional-duty basis.

(U) ~~(S)~~ These actions filled a void in US support of the CIDG program. Although complete advisory training and financial support had made possible the operations that caused CIDG casualties, the Vietnamese had hitherto been expected to provide care for them. It is easy to adopt a harsh view of the Vietnamese failure to provide adequate care, yet the circumstances were extenuating.

Vietnamese hospitals were overcrowded and understaffed, and it is scarcely surprising that both ARVN and civilian medical authorities regarded the admission of CIDG patients as an undesirable overload.

(U) ~~(S)~~ There is an implication here for future planning of programs similar to the CIDG—similar in that it is proposed to form irregular units of indigenous personnel (especially ethnic minorities), quite separate from the regular military and police forces of the host country, with which to conduct ancillary counterguerrilla operations. If US support must include the whole range of base construction, clothing, equipment, weapons, and pay of troops directly at the user level, it appears to be a mistake to expect or insist that a host-government agency perform a function organic to or required by the operation of the program without ensuring that the agency has an adequate capability to perform it.

CIVIC ACTION/PSYCHOLOGICAL OPERATIONS

(U) With the introduction of US combat forces to Vietnam in 1965 the MACV advisory function, including that of 5 SFGA, was gradually subordinated to the operational requirements of US and other Free World Military Assistance Forces (FWMAF) combat forces. CA/PSYOP activities to win the hearts and minds were altered when necessary or gave precedence to activities more directly in support of achieving military victory. A difference is discernible between the official emphasis on nation building as a legitimate war-winning effort for the military, both as advisers and doers, and the practice of units and unit advisers in the field.

(U) The fact is that the human and material resources for a meaningful commitment to nation building are not really available to 5 SFGA, nor is it feasible to attempt this activity in districts of active Phase II and Phase III insurgency. The need is apparent to adjust ends to the means available within the constraints of a priority for the effort, and all that contributes directly to it, of achieving military victory. In the absence of a clear distinction between CA/PSYOP programs that directly contribute to the military effort and those that contribute to national development, confusion, frustration, and a lack of enthusiasm are apt to characterize the performance of the individuals involved. There is a need to define the CA/PSYOP mission in terms relevant to the needs and capabilities of detachments in the field. The lofty goals of nation building must be rejected for the modest goals of military civic action until the security of the people that can only come with military success is realized. CA/PSYOP activities must contribute directly to the military effort.

(U) The training and indoctrination of Special Forces and augmentation personnel assigned to CA/PSYOP duty in Vietnam needs reexamination and continued periodic assessment in the light of accumulating field experience. Greater selectivity is required in selecting personnel for CA/PSYOP. If necessary, incentives should be provided. Whether the commitment is to nation building or to a program contributing directly to the defeat of an armed insurgency there will be a continuing requirement for men professionally qualified in this field. Whether CA/PSYOP is directed to winning the hearts and minds or winning the war, the personnel involved must have a thorough knowledge of the language and culture of the people with whom they deal. At present such

is not the case. For PSYOP officers to attempt psychological operations in Southeast Asia without such knowledge approaches the ludicrous.

US ARMY SPECIAL FORCES IN THAILAND

(U) In enough respects to lend some validity to comparison, the insurgency in Northeast Thailand 1965–1967 may be assessed in the time frame of Vietnam 1958–1960. Incipient insurgency intensified to guerrilla warfare. The governments that had relied on police and constabulary to contain subversion turned in alarm to the military, and regular infantry battalions were committed to counterguerrilla operations.

(U) The Royal Thai Government (RTG) and the various elements of the US Mission in Bangkok have not been unmindful of the lessons of the earlier phases of the VC insurgency. The Thai internal defense plan dates from 1962. The constabulary and provincial police components that were so neglected in Vietnam have been provided with better equipment and a strike force capability and have been trained in counterguerrilla operations. Unlike the ARVN infantry units that were suddenly assigned the internal defense mission in 1960, it has been possible to train RTA infantry units in the basics of counterguerrilla operations before they take the field. Some planning could have been undertaken earlier and implemented more promptly, but the nature of the threat in the Northeast was at least understood, if not taken seriously until December 1965.

(U) ~~(S)~~ As for the threat in the South, it is the insurgents, the communist terrorists (CTs), who appear to be applying the lessons learned from their failure in what is now Malaysia. The insurgents in the Northeast seem to have launched guerrilla warfare without having attained much of a capability and without having developed an adequate popular base, whereas the CTs in the South have been occupied for years, with disturbing success, in gaining control of the population. Until recently there appears to have been little interference with or comprehension of what the insurgents were doing by the RTG. The JUSMAG has been outside the mainstream of the counterinsurgency effort, because until recently the RTG with the concurrence of the US Mission regarded the National Police as its primary internal defense instrument and wished to preserve civil-government control in low-intensity insurgency.

(U) ~~(S)~~ The Army Advisory Group of the JUSMAG has been concerned chiefly with the conventional organization, training, and equipping of the Royal Thai Army (RTA), which has no active role in Phase I insurgency, before the outbreak of guerrilla warfare. Its only role in Phase I is to prepare for Phase II. This was not overlooked. A real training effort in counterguerrilla operations was undertaken in 1962 when JUSMAG programmed Mobile Training Teams (MTTs) from the 1st SFGA on Okinawa to conduct training for RTA infantry battalions and Border Patrol Police cadres. Such training continued in subsequent years and USASF also helped to develop and train the RTA Special Forces. It was not until 1966, however, after the outbreak of guerrilla warfare in the Northeast that USASF were brought in to advise and train the RTA on an intensive and continuing basis. The training does not include, however, instruction in internal defense intelligence for RTA units that are taking the field against the CTs.

(U) ~~(C)~~ Many problems arose and were sol...l during the 6-month tour of the USASF MTT (March–September 1966) before the arrival of the 46th SF Co. These are described in the last chapter of Pt II. The only one that need be noted here, for its bearing on future policy, is the lack of a detailed joint implementing agreement before the arrival of the MTT (Det C-101-A (Prov)) to support the operations and training of the Combined Special Forces Training Base. No written guidance governed combined staff procedures, and the extent of the support to be provided by Thai and US agencies was not defined. Requirements as they arose were considered from the viewpoint of how much US channels could provide, rather than of who should provide because of the inflexibility of Thai funding procedures in meeting unforeseen demands. No action was taken by MACTHAI/JUSMAG on a draft of such an agreement and letter of instruction submitted by the commander of the MTT. Presumably the difficulties were ironed out in the doing, but a formal agreement appears desirable when a US unit is introduced into a host country to engage in a project involving joint training conducted under a combined unit headquarters.

Counterparts

(U) It was observed in a previous chapter that USASF personnel appear to establish rapport more easily with Thais than with Vietnamese. Many factors contribute to this, among them the greater integration of the USASF training effort in Thailand and the superior quality and maturity of the RTA officer corps.

(U) Even in Thailand, however the USASF accomplishment in counterpart relations is uneven, and the general achievement of USASF in both countries after several years of exposure falls short of what it might be, chiefly because US personnel do not make the effort to learn more of the culture and language of the people they advise even though the opportunity to do so occurs daily. There is also the occasional deployment to Southeast Asia of an officer who is unsuited by temperament to work with counterparts of another culture. Such an officer has a harmful effect and should be transferred to duty that does not require close association with indigenous officers.

(U) These observations on the counterpart relations are intended to indicate need for improvement and not to detract from what has been a fine performance of the assigned mission in Thailand on the part of USASF.

EMPLOYMENT AND MISSION PRIORITY

(U) ~~(S)~~ Since 1959 USASF have been continuously committed in Southeast Asia to perform a mission for which they were not structured, a mission in fact not even contemplated when the organization was formed. In Laos USASF detachments organized and trained Hill Tribesmen into paramilitary assets and were assigned as half detachments to infantry battalions of the Laotian army to train them and provide advice during combat operations. In Vietnam, USASF developed, supported, and operated the CIDG program although officially remaining in the advisory role. In Thailand since 1962 USASF MTTs and more recently the 46th SF Co have constituted the instrument of JUSMAG to train the RTA in counterguerrilla operations.

(U) The outlook for the future is a continuing requirement for such employment, yet it is the secondary mission of USASF. It may be appropriate to consider whether the primary unconventional warfare mission should not become the secondary mission in view of the record and the prospect. This is not to suggest that the unconventional warfare mission is not paramount in the context of general war and that a ready capability for it must not be maintained and continuously developed. It is to suggest that it should be regarded as a contingency mission and, until the occasion for it arises, the second mission.

Appendix A

PROGRAM OF INSTRUCTION FOR MOBILE STRIKE FORCES

(Formerly the Mobile Guerrilla Force)

Phase I, Base Training 230

Phase II, Field Training 231

(U)

PHASE I, BASE TRAINING

Subject	Hours[a]	Remarks
Part I, Basic Individual Training (UW)		
1. Combatives	6	Alternate each day with road marches
2. Road marches	6	Full equipment; forced march increased from 1 to 2 hr
3. Physical fitness	5	30 min each morning
4. Medical subjects	6	Self first aid; field sanitation
5. Intelligence subjects	4	Reporting, terrain-analysis procedures
6. Hand and arm signals	2	Standard
7. Communications	2	PRC-25, HT-1 RTO procedures
8. Marksmanship	20	Train-Fire manual
9. Mines, grenades, booby traps	2	Claymore, M26 grenade, CS (tear gas), smoke, flare
10. Individual tactical training	12	Manual
11. Land navigation	2	Compass; map orientation
12. Infiltration course (close combat)	2	
13. PW handling	2	Search, secure, sight, separate, silence, speed, safeguard
14. Instinctive shooting	12	Use tracer initially, 25 m fixed, 25 m bobber, jungle lane
15. Code of conduct	1	Oath of allegiance
16. Squad combat form	2	Parade field
17. Individual night firing	2	1 hr—night vision; 1 hr—aiming technique
18. Fire and movement	8	Progression: individual; 2 men; 3 men; team
Total	96 (10 days)[b]	
Part II, Advanced Individual and Specialist Training (UW)		
1. Medical specialist	35	Task Force divided into 3 groups for 5-hr instruction each morning for 7 days (specialists); in afternoon all personnel return to platoon for training
2. M60 machinegun	35	
3. M79, demolitions specialist	35	
4. Battle drill	16	
5. Combatives	8	
6. Road march	11	
7. Physical fitness	7	
8. Air operations	4	Aerial resupply organization of drop zone, practical exercise w/wet run
9. Patrolling	16	Manual-practical exercise
10. Use of special equipment	2	Stengun, M14, smoke-flare, pengun, panels, signal mirrors, time pencils, snap link, scope
11. Individual night	2	
12. Hasty river crossing	8	1-hr conference demonstration; 7-hr practical exercise (4-hr road march)
13. Review intelligence-counter-intelligence	2	VC identification, tactics, intelligence gathering
14. Guerrilla tactics	8	Harassing operations, attack, retreat, defense, raid, ambush, linkup, tracking

PRECEDING PAGE BLANK - NOT FILMED

REFERENCES AND NOTES

CITED REFERENCES AND NOTES

1. Research Analysis Corporation. "Case Study of US Counterinsurgency Operations in Laos, 1955–1962 (U)." RAC-T-435. Sep 64. SECRET–SPECIAL HANDLING
2. ——. "US Army Special Forces Operations under the Civilian Irregular Defense Group Program in Vietnam, 1961–1964 (U)." RAC-T-477. Apr 66. SECRET
3. US Army, 1st Special Forces, 5th Special Forces Group, Airborne, "Quarterly Command Report for Period Ending 30 June 1965." 15 Jul 65. SECRET
4. COL Francis J. Kelly, CO (13 Jun 66–12 Jun 67), 5th Special Forces Group, Airborne, 1st Special Forces, US Army, "Senior Officer Debriefing Program, Debriefing Report." 30 May 67. SECRET
5. US Army, 1st Special Forces, HQ 5th Special Forces Group, Airborne, "Quarterly Command Report for Period Ending 30 Sep 65 (U)." 10 Oct 65. CONFIDENTIAL
6. LTG Stanley R. Larsen, I FFORCEV Corps Senior Adviser, instructions to CO 5th Special Forces Group, Airborne, 8 Apr 67.
7. Dept of Army, "Special Forces Operations," FM 31–21. Sep 61.
8. ——. "Special Forces Operations," FM 31–21. 3 Jun 65.
9. ——. "Airborne Special Forces Group," TOE 31–105E, 26 Sep 63.
10. ——. "Staff Officers' Field Manual: Staff Organization and Procedure," FM 101-5, 19 Jul 60.
11. Research Analysis Corporation, "Alternatives or Modifications to Present US Advisory System (U)," RAC-R-32. Dec 67. SECRET
12. US Military Assistance Command, Vietnam, commander to corps senior advisers, Ltr, subject: "Terms of Reference for Subsector Advisors," 11 Sep 64. CONFIDENTIAL
13. ——, Det A-331, after-action report, 15 Apr 65. CONFIDENTIAL
14. ——. "Guide for Sub-Sector Advisors," 18 May 65. UNCLASSIFIED
15. US Army, 1st Special Forces, HQ 5th Special Forces Group, Airborne, "Quarterly Command Report for Period Ending 31 December 1965," 15 Jan 66. SECRET
16. US Military Assistance Command, Vietnam, "Increased MACV Support for the US/GVN Effort at District and Province Level," study, Jun 66. CONFIDENTIAL
17. ——, "Combat Operations Organization and Deployment of US Advisory Teams at Province and District Levels," Directe 525-15, (drafted in study listed above[16]), 4 Jul 67. CONFIDENTIAL.
18. US Army, 1st Special Forces, HQ 5th Special Forces Group, Airborne, "Operational Report for Quarterly Period Ending 31 July 1967 (U)." 15 Aug 67. SECRET
19. ——, ——, ——, "The Special Forces Counterinsurgency Program," Ltr of Instructions 1 (1st rev). 1 Jan 65. CONFIDENTIAL.
20. ——, ——, ——, "Operational Report for Quarterly Period Ending 31 Jan 1967 (U)." 15 Feb 67. SECRET
21. ——, ——, ——, "Command Operational Report on Lessons Learned for the Period Ending 30 April 1966 (U)." RCS CSGPO-28 (R1). 10 May 66. CONFIDENTIAL
22. These features were authorized and set forth for adoption by affected commands in: Dept of Army, "Project Parasol (U)," Cir 580-1. 10 Sep. SECRET
    US Army, Ryukyu Islands, "Logistical Support of USASF Counterinsurgency Program in Vietnam (U)," Reg 700-2. 2 Jan 64. FOR OFFICIAL USE ONLY
    ——, "Logistical and Financial Support of USASF Counterinsurgency Program in Vietnam (U)," Reg 700-3, 31 Jan 64. SECRET

Subject	Hours[a]	Remarks
15. Squad defense: night fire	2	Techniques of fire manual
16. Squad assault: night fire	2	If time permits
17. Guerrilla-base organization and security	4	Breakout-fortification, counterintelligence listening posts/observation posts, evasion, preparation of defense, field expedients, field sanitation, security warning, organization
18. Raid techniques	8	Search and seizure techniques, practical exercise
19. Ambush techniques	8	Practical exercise
20. Preparation of equipment	2	Prepare standing operating procedures and equip, lay out, inspect
Total	143 (15 days)[b]	

[a]Hours of training based on station-type instruction. Instructor presents 2-hr block 4 times per day. Last hour each day is combatives or road march. Nightly training films are integrated with the instruction.

[b]Based on 9½-hr training day.

(U)

PHASE II, FIELD TRAINING

PART I, SMALL-UNIT TACTICAL FIELD TRAINING

1. 2-day squad-level operation—establish base, basic patrolling, ambush
2. 3-day platoon-level operation—establish base, raid, ambush, linkup, use of Tac Air

PART II, TASK FORCE FIELD TRAINING EXERCISE

1. 5-day field training exercise (FTX), minimum
2. 7-day FTX, average
3. 10-day FTX, optimum

RÉSUMÉ:

Phase I, Base Training

Part I, 10 days
Part II, 15 days

Phase II, Field Training

Part I, 5 days
Part II, 7 (5) (10) days

PRECEDING PAGE BLANK - NOT FILMED

REFERENCES AND NOTES

CITED REFERENCES AND NOTES

1. Research Analysis Corporation. "Case Study of US Counterinsurgency Operations in Laos, 1955–1962 (U)," RAC-T-135. Sep 64. SECRET–SPECIAL HANDLING
2. ——. "US Army Special Forces Operations under the Civilian Irregular Defense Group Program in Vietnam, 1961–1964 (U)," RAC-T-477. Apr 66. SECRET
3. US Army, 1st Special Forces, 5th Special Forces Group, Airborne, "Quarterly Command Report for Period Ending 30 June 1965," 15 Jul 65. SECRET
4. COL Francis J. Kelly, CO (13 Jun 66–12 Jun 67), 5th Special Forces Group, Airborne, 1st Special Forces, US Army, "Senior Officer Debriefing Program, Debriefing Report," 30 May 67. SECRET
5. US Army, 1st Special Forces, HQ 5th Special Forces Group, Airborne, "Quarterly Command Report for Period Ending 30 Sep 65 (U)," 10 Oct 65. CONFIDENTIAL
6. LTG Stanley R. Larsen, I FFORCEV Corps Senior Adviser, instructions to CO 5th Special Forces Group, Airborne, 8 Apr 67.
7. Dept of Army, "Special Forces Operations," FM 31-21. Sep 61.
8. ——. "Special Forces Operations," FM 31-21. 3 Jun 65.
9. ——. "Airborne Special Forces Group," TOE 31-105E, 26 Sep 63.
10. ——. "Staff Officers' Field Manual: Staff Organization and Procedure," FM 101-5, 19 Jul 60.
11. Research Analysis Corporation, "Alternatives or Modifications to Present US Advisory System (U)," RAC-R-32. Dec 67. SECRET
12. US Military Assistance Command, Vietnam, commander to corps senior advisers, Ltr, subject: "Terms of Reference for Subsector Advisors," 11 Sep 64. CONFIDENTIAL
13. ——, Det A-331, after-action report, 15 Apr 65. CONFIDENTIAL
14. ——. "Guide for Sub-Sector Advisors," 18 May 65. UNCLASSIFIED
15. US Army, 1st Special Forces, HQ 5th Special Forces Group, Airborne, "Quarterly Command Report for Period Ending 31 December 1965," 15 Jan 66. SECRET
16. US Military Assistance Command, Vietnam, "Increased MACV Support for the US/GVN Effort at District and Province Level," study, Jun 66. CONFIDENTIAL
17. ——, "Combat Operations Organization and Deployment of US Advisory Teams at Province and District Levels," Direc 525-15, (drafted in study listed above[16]), 4 Jul 67. CONFIDENTIAL
18. US Army, 1st Special Forces, HQ 5th Special Forces Group, Airborne, "Operational Report for Quarterly Period Ending 31 July 1967 (U)," 15 Aug 67. SECRET
19. ——, ——, ——, "The Special Forces Counterinsurgency Program," Ltr of Instructions 1 (1st rev), 1 Jan 65. CONFIDENTIAL
20. ——, ——, ——, "Operational Report for Quarterly Period Ending 31 Jan 1967 (U)," 15 Feb 67. SECRET
21. ——, ——, ——, "Command Operational Report on Lessons Learned for the Period Ending 30 April 1966 (U)," RCS CSGPO-28 (R1), 10 May 66. CONFIDENTIAL
22. These features were authorized and set forth for adoption by affected commands in: Dept of Army, "Project Parasol (U)," Cir 580-1, 10 Sep. SECRET
    US Army, Ryukyu Islands, "Logistical Support of USASF Counterinsurgency Program in Vietnam (U)," Reg 700-2, 2 Jan 64. FOR OFFICIAL USE ONLY
    ——, "Logistical and Financial Support of USASF Counterinsurgency Program in Vietnam (U)," Reg 700-3, 31 Jan 64. SECRET

UNCLASSIFIED

23. RAC-T-477,[2] Chap. 15 describes the Special Forces logistical system in detail. The elements of the system concerned with logistical support from US sources to the LSC at Nha Trang were essentially the same during the period of this study.
24. COL John H. Spears, "History of the 5th Special Forces Group (Airborne), 1st Special Forces, 1 Oct 64–31 Dec 64 (U)," HQ 5th Special Forces Group, Airborne, Historical Section, no date. CONFIDENTIAL
25. Aviation Week and Space Technology, 24 May 65.
26. US Army, 1st Special Forces, HQ 5th Special Forces Group, Airborne. "Campaign Plan for Special Forces Revolutionary Development in Vietnam," memo, 1 Mar 67. UNCLASSIFIED
27. ——, ——, ——, "Opening and Closing of Camps in Support of CIDG Program (U)." Memo 4 (renumbered 551–50), Pt III, "Withdrawal of US Special Forces Support of CIDG Areas," 24 Oct 64. CONFIDENTIAL
28. ——, ——, ——, "Conversion of CIDG to RF/PF (U)," study and inclosures, 18 May 65. CONFIDENTIAL
29. ——, ——, ——, Reg 210-1, 5 May 65, and subsequent changes.
30. ——, ——, ——, draft disposition form, to MAC J-324, subject: "Conversion of CIDG Personnel to RF Status," undated, probably latter half of 1965.
31. ——, ——, ——, "Operational Report for Quarterly Period Ending 31 Oct 66," 15 Nov 66. CONFIDENTIAL
32. ——, ——, ——, interview with B Co commander, Pleiku. Apr 67.
33. ——, ——, ——, interviews with A Det personnel, Plei Mrong, Apr 67.
34. D. A. Price, "The Communist Terrorist Organization in Southern Thailand (U)," Stanford Research Institute, 1 Feb 67. SECRET
35. US Military Assistance Command, Thailand, J2, Rept 6074000166, 10 Jan 66. SECRET
36. ——, J3 to CO Det C-101-A (Prov), 1st Special Forces Group, Airborne, Ltr of instructions (draft), 9 Apr 66. CONFIDENTIAL
37. US Army Support Command, Thailand, 46th SF Co, "Unit Designation and Reporting List," 1 Apr 67.
38. US Army, HQ 1st Special Forces Group, Airborne, MTT Det C-101-A (Prov), after-action report, Sep 66. SECRET
39. Joint Chiefs of Staff, memo to Secretary of Defense, 14 Oct 66. SECRET
40. New York Times, 18 Jan 68.

[redacted]

UNCLASSIFIED

deleted

[redacted]

RAC

RAC DISTRIBUTION LIST B

1 Sep 68

(Less these deletions: O17)

Address code	Agency	Number of copies
	DEPARTMENT OF DEFENSE	
D3	Armed Forces Staff College	1
A9	Assistant Secretary of Defense, Systems Analysis	2
A3	Assistant Secretary of Defense, International Security Affairs	1
C4	Defense Communications Agency	1
C6	Defense Document Center (DDC)	20
C9	Defense Intelligence Agency (DIA SA-2B)	1
A2	Director of Defense Research and Engineering	1
C1	Advanced Research Projects Agency	1
B5	Weapons Systems Evaluation Group	1
D2	Industrial College of the Armed Forces	1
D1	National War College	1
	JOINT CHIEFS OF STAFF	
B2	Joint Chiefs of Staff	1
	HEADQUARTERS, DEPARTMENT OF THE ARMY	
	Secretary of the Army	
E2	Office, Under Secretary of the Army, Operations Research	1
E4	Assistant Secretary of the Army (R&D)	1
	CHIEF OF STAFF, US ARMY	
E33	Assistant Vice Chief of Staff of Army	5
	DEPARTMENT OF THE ARMY	
E23	Assistant Chief of Staff for Force Development	1
O24	Army War College	1
E15	The Army Library, Attn: ASDIRS	1
O27	Academic Computer Center, West Point, N.Y.	1
E27	Chief of Research and Development	1
E8	Deputy Chief of Staff for Military Operations	2(4)*
E7	Deputy Chief of Staff for Personnel	1
K11	Defense Logistics Studies Information Exchange, US Army Logistics Management Center, Ft Lee	2
	ARMY COMMANDS, AGENCIES, AND ELEMENTS	
L2	Combat Developments Command	1
	COMBAT DEVELOPMENTS COMMAND SUBELEMENTS	
P3	Combat Service Support Group, Ft Lee	1
O26	Institute of Advanced Studies, Carlisle Barracks	1
	SCHOOLS, ARMY	
O2	Air Defense, Ft Bliss	1
O3	Armor, Ft Knox	1
O4	Artillery and Guided Missile, Ft Sill	1
O15	Army Management, Ft Belvoir	1
O16	Army School, Europe	1
O17	Chemical, Biological, and Radiological, Ft Campbell	1
O5	Chemical Corps, Ft McClellan	1
O6	Engineer (ESSY-L), Ft Belvoir	1
O7	Finance, Ft Benjamin Harrison	1
O10	Medical Field Service, Brooke	1
O19	Ordnance Guided Missile, Redstone Arsenal, Ala.	1
O21	Quartermaster, Ft Lee	1
O23	Special Warfare, Ft Bragg	1
O25	Transportation, Ft Eustis	1
O13	School of Americas	1
	US AIR FORCE	
T8	Air University Library, Maxwell Field	1
	US NAVY	
S1	Chief of Naval Operations, OP-96	1
S9	Naval War College, Newport, R.I.	1
	US GOVERNMENT AGENCIES	
U1	Central Intelligence Agency	1

*Send 4 copies of RAC Strategic Studies Department documents, but only 2 copies of all other RAC documents.

Institute of Strategic and Stability Operations (Prov)	1
USAJFK Center for Special Warfare (Airborne)	1
Each US Army Special Forces Group	1
46th Special Forces Company (Airborne)	1
US Army, Pacific	1

UNCLASSIFIED

DOCUMENT CONTROL DATA - R&D

(Security classification of title, body of abstract and indexing annotation must be entered when the overall report is classified)

1. ORIGINATING ACTIVITY (Corporate author) Research Analysis Corporation McLean, Virginia 22101	2a. REPORT SECURITY CLASSIFICATION ~~SECRET - Special Handling~~ 2b. GROUP 3

3. REPORT TITLE
US ARMY SPECIAL FORCES AND SIMILAR INTERNAL DEFENSE ADVISORY OPERATIONS IN MAINLAND SOUTHEAST ASIA, 1962-1967 (U)

4. DESCRIPTIVE NOTES (Type of report and inclusive dates)

5. AUTHOR(S) (First name, middle initial, last name)
Paul S. Ello, Robert H. Williams
Richard P. Joyce, William Woodworth

6. REPORT DATE June 1969	7a. TOTAL NO. OF PAGES 237	7b. NO. OF REFS 129

8a. CONTRACT OR GRANT NO. b. PROJECT NO. DAHC-19-69-C-0017 008.406 c. d.	9a. ORIGINATOR'S REPORT NUMBER(S) RAC-TP-354 9b. OTHER REPORT NO(S) (Any other numbers that may be assigned this report)

10. DISTRIBUTION STATEMENT In addition to security requirements which apply to this document and must be met, each transmittal outside the Department of Defense must have prior approval of United States Army Combat Developments Command (ATTN: ISSO-C), Fort Bragg, North Carolina 28307.

11. SUPPLEMENTARY NOTES	12. SPONSORING MILITARY ACTIVITY US Army Combat Developments Command

13. ABSTRACT (U) This study reconstructs and analyzes the recent experience of US Army Special Forces (USASF) and other similar advisory detachments assigned to train, advise, assist, and operationally support internal defense forces in mainland Southeast Asia. The study reviews and analyzes the activities and utilization of USASF in Vietnam from October 1964 to mid-1967 and in Thailand from 1962 to 1967. The study constitutes a follow on to two previous RAC studies of Special Forces operations in Laos (RAC-T-435) and Vietnam (RAC-T-477) and appraises at a relatively low level of security classification the most recent experience in the light of the regional war that is in fact being waged in mainland Southeast Asia by communist forces.

DD FORM 1 NOV 65 1473

UNCLASSIFIED

KEY WORDS	LINK A		LINK B		LINK C	
	ROLE	WT	ROLE	WT	ROLE	WT
advisory operations						
civic action and psychological operations						
Civilian Irregular Defense Groups						
combat operations						
combined operations						
command and control						
conversion and turnover						
counterinsurgency						
doctrine						
foreign military training						
intelligence						
internal defense						
internal development						
irregular forces						
logistic support						
medical						
special operations						
Thailand						
unconventional warfare						
US Army Special Forces						
Vietnam						

END

DATE
FILMED

8-69

CONFIDENTIAL

Technical Report
distributed by

UNCLASSIFIED

DEFENSE TECHNICAL INFORMATION CENTER

DTIC Acquiring Information – Imparting Knowledge

Defense Logistics Agency
Defense Technical Information Center
Cameron Station
Alexandria, Virginia 22304-6145

UNCLASSIFIED

CONFIDENTIAL

Policy on the Redistribution of DTIC-Supplied Information

As a condition for obtaining DTIC services, all information received from DTIC that is not clearly marked for public release will be used only to bid or perform work under a U.S. Government contract or grant or for purposes specifically authorized by the U.S. Government agency that is sponsoring access. Further, the information will not be published for profit or in any manner offered for sale.

Non-compliance may result in termination of access and a requirement to return all information obtained from DTIC.

NOTICE

We are pleased to supply this document in response to your request.

The acquisition of technical reports, notes, memorandums, etc., is an active, ongoing program at the **Defense Technical Information Center (DTIC)** that depends, in part, on the efforts and interest of users and contributors.

Therefore, if you know of the existence of any significant reports, etc., that are not in the **DTIC** collection, we would appreciate receiving copies or information related to their sources and availability.

The appropriate regulations are Department of Defense Directive 3200.12, DoD Scientific and Technical Information Program; Department of Defense Directive 5230.24, Distribution Statements on Technical Documents; American National Standard Institute *(ANSI)* Standard Z39.18-1987, Scientific and Technical Reports - Organization, Preparation, and Production; Department of Defense 5200.1-R, Information Security Program Regulation.

Our Acquisition Section, **DTIC-FDAB**, will assist in resolving any questions you may have concerning documents to be submitted. Telephone numbers for that office are **(202) 274-6847**, or Autovon **284-6847**. The Reference Services Section, **DTIC-FDRA**, will assist in document identification, ordering and related questions. Telephone numbers for that office are **(202) 274-7633** or Autovon **284-7633**.

DO NOT RETURN THIS DOCUMENT TO DTIC

EACH ACTIVITY IS RESPONSIBLE FOR DESTRUCTION OF THIS DOCUMENT ACCORDING TO APPLICABLE REGULATIONS.