THIS FILE IS MADE AVAILABLE THROUGH THE DECLASSIFICATION EFFORTS AND RESEARCH OF:

THE BLACK VAULT

THE BLACK VAULT IS THE LARGEST ONLINE FREEDOM OF INFORMATION ACT / GOVERNMENT RECORD CLEARING HOUSE IN THE WORLD. THE RESEARCH EFFORTS HERE ARE RESPONSIBLE FOR THE DECLASSIFICATION OF THOUSANDS OF DOCUMENTS THROUGHOUT THE U.S. GOVERNMENT, AND ALL CAN BE DOWNLOADED BY VISITING:

HTTP://WWW.BLACKVAULT.COM

YOU ARE ENCOURAGED TO FORWARD THIS DOCUMENT TO YOUR FRIENDS, BUT PLEASE KEEP THIS IDENTIFYING IMAGE AT THE TOP OF THE .PDF SO OTHERS CAN DOWNLOAD MORE!

~~CONFIDENTIAL~~

RESEARCH PAPER P-340

PACIFICATION IN VIETNAM: A SURVEY (U)

Joshua Menkes
Raymond G. Jones, Col., USA

December 1967

INSTITUTE FOR DEFENSE ANALYSES
SCIENCE AND TECHNOLOGY DIVISION
400 Army-Navy Drive, Arlington, Virginia 22202

Contract DAHC15 67 C 0011
Task T-55

DECLASSIFIED BY AUTHORITY OF
DDR&E/EAP
940217 92-F01-1525
DATE CASE #

#575

~~CONFIDENTIAL~~

ACKNOWLEDGMENT

It is a pleasure to acknowledge the help and cooperation that we received in the course of our study. Military and civilian officials at all levels gave freely of their time and shared with us unreservedly their knowledge, their hopes, and their apprehensions. Patiently they submitted, to what must have seemed to them interminable discussions and at times rather harsh or even unfounded criticism.

If our endeavor will contribute to shed some light on the pacification effort in Vietnam, then the credit must go to our informants. To the extent that we manage to obfuscate the issue, we must take the blame.

A partial record of interviews, briefings, discussions, and field visits made during the time period September 1966 through April 1967 is appended (Appendix A).

J.M.

R.G.J.

ABSTRACT

This report presents a political analysis of the pacification effort in Vietnam. It is based upon numerous interviews both in the United States and Vietnam. The purpose of this paper is to present a discussion of some of the problems, policies, and actions in the pacification program in South Vietnam, and a constructive critique of certain elements in that program with primary attention directed to the Revolutionary Development Program. Some observations are made on several peripheral issues such as the urban situation, the counterforce engagement, and the counterguerrilla engagement. Specific conclusions and recommendations are made regarding means to effect improvements in both the military and nonmilitary aspects of the pacification program.

CONTENTS

INTRODUCTION 1

INSURGENCY AND COUNTERINSURGENCY 5

Rising Expectations 5
World Stability 5

THE VIETNAMESE VIEW OF THE STRUGGLE 7

U.S. -Communist Confrontation 7
Peasant Horizon and Nationalism 7
GVN Image 8

CHARACTERISTICS OF THE POLITICAL CONFRONTATION IN VIETNAM 11

NF Appeal 11
GVN Counter 11
Social Change 12
Interdependence 13
Motivation 14
Pacification 14

MATERIAL BENEFITS vs IDEOLOGY 17

Contending Cases 17
Origin of RD 18
U.S. Contribution 18

RD CONCEPTS 19

Why RD 19
Nature of Dissent 20
Implementation 20

INFRASTRUCTURE 23

The PRP 23
Social Control 24
Extraction 25

SECURITY 27

Military Security 27
Political Security 29
Political-Military Comparison 31
Control of Military Units in Support of RD 32

REVOLUTIONARY DEVELOPMENT EFFECTIVENESS 35

Significance of Security 35
RD Weakness 36
The Tasks 36
RD and Other Ministries 38
Greatest Need 38
Measuring Progress 39

ORGANIZATION FOR RD 41

THE URBAN SITUATION 45

THE COUNTERFORCE ENGAGEMENT 47

THE COUNTERGUERRILLA ENGAGEMENT 51

CONCLUSIONS AND RECOMMENDATIONS 55

General 55
Military Aspects 56
Nonmilitary Aspects 58

APPENDICES

A - Partial Record of Interviews, Briefings, Discussions, and Field Visits, September 1966-April 1967 61

B - Relation of Interdependence, Restraint, and Altruism 69

C - RD Historical Perspective 75

D - GVN Organization Chart for Revolutionary Development, GVN Security Structure 85

E - Provincial Administrative Organization, Provinces of South Vietnam 91

F - Characteristics of the Military Confrontation 95

G - Glossary and Definitions 103

The major advances in civilization are processes that all but wreck the societies in which they occur.

Alfred North Whitehead
"Adventures in Ideas"

Indeed what has made debate so easy, and action so hard, in Viet Nam is that the debater can defend the propositions he likes from a great pile of evidence in which there is plenty to support every view. In our actions, however, we have to live with the whole.

McGeorge Bundy
"The End of Either/Or"
Foreign Affairs,
January 1967

INTRODUCTION

Project PACKARD was initiated in September 1966 as an effort to determine how the R&D resources of DDR&E could be brought to bear on pacification in Vietnam. The pacification effort is so inextricably tied to the political situation that we spent a considerable portion of our study at elucidating this interplay.

This paper then is a political analysis based on numerous interviews both in the U.S. and in Vietnam. The authors visited many places and spoke to many people during the eight-month span of this effort. The ultimate aim of this Research Paper is to present a discussion of some of the problems, policies, and actions in the pacification program in South Vietnam, and a constructive critique of certain elements in that program with primary attention directed to the Revolutionary Development Program.

The views expressed are necessarily subjective opinions based on observation, interviews, and impressions accumulated in two trips to Vietnam. Given the complications involved and the constrictions of time, this paper is necessarily an impressionistic assessment rather than a scientific analysis.

It is necessary at the outset to define our understanding of some of the basic terms. "Pacification," as we understand it, encompasses all those activities aimed at enabling the people to accept willingly the central government as the instrumentality for the satisfaction of their political, economic, and social grievances and aspirations. Pacification concurrently embodies those activities aimed at enabling the government to execute their responsibilities for the satisfaction of the people's grievances and aspirations.

Revolutionary Development (RD) may be defined as a program whereby selected, trained individuals, living and working with the populace, assist in the implementation of GVN pacification programs. The formal instrument for pacification then is the South Vietnamese Ministry for Revolutionary Development.

If it has been said by one Vietnam observer it has been said by all that the war in Vietnam is fought on two fronts: the military and the political. Success in the military engagements has been no accident.

Our fighting men in Vietnam are described by some proudly and by others begrudgingly as professionals. They are supported by the largest industrial nation, equipped with the finest equipment, led by officers and NCO's who have received the best training that the military establishment in the United States can offer.

However, on the political front the fight is carried by Vietnamese cadre who are ill-equipped, poorly trained, and who lack motivation and leadership. Their ammunition--the political program--is inadequate. Success in any endeavor does not come by good fortune. For the political cadre to be effective they have to be supplied with adequate means to counter the political thrust of the enemy. The single most effective propaganda weapon is the truth--tangible evidence that the cause of the GVN is the cause of the people. And the only way by which this congruence can be established is by popular participation.

People less sophisticated politically than the Vietnamese could be manipulated by slogans and lip service to the cause of freedom. Vietnamese, however, are fully aware that political power comes from political organization and not from empty phrases or out of the barrel of a gun. Until such time that the government permits and encourages broadly based political organizations, support by the Vietnamese people to the government will be lacking. If the goal in Vietnam is to be realized, success must not only be achieved on the military front with the external aid of the U. S., it must be achieved also on the political front with the internal resources of the Vietnamese.

In this paper, we first address ourselves to the general subject of insurgency and counterinsurgency and the U.S. policy of response, because it is necessary to understand this global issue before evaluating our specific Vietnam response. We next discuss the Vietnamese view of the struggle and then in more specifics the political confrontation in Vietnam. Two basic schools of thought regarding the proper response to the challenge of insurgency (i.e., material benefits vs ideology) are reviewed and then the RD concepts and implementation are discussed. The two main problems involved in RD implementation--infrastructure and security--are then taken up. The question of revolutionary development effectiveness is addressed and the current revolutionary development organization is examined. Next, some observations are made on several peripheral issues such as the urban situation, the counterforce engagement, and the counterguerrilla engagement. Finally, specific conclusions and recommendations are made regarding means to effect improvements in both the military aspects and nonmilitary aspects of the pacification program.

It should be noted that the principal information cut-off date for this paper was April 1967 and since that date some of the recommendations have been acted upon.

INSURGENCY AND COUNTERINSURGENCY

RISING EXPECTATIONS

The issue in Vietnam, one of the most crucial of our time, is the challenge of leadership in the "revolution of rising expectations." The U.S., representing the liberal democracies, challenges the alleged inevitability that these upheavals will be communist led or at least communist inspired and supported. U.S. policy will be judged by its ability to sustain by our support a government which in time becomes representative.

WORLD STABILITY

Within recent years, U.S. foreign policy has been largely designed to maintain stability to permit the controlled evolution of institutions free from communist influence. Stability need not lead to immobility and to resistance to the controlled and orderly evolution of a broadly based popular government. This message, however, is barely discernible behind the activities of maintaining the status quo. When maintenance of the status quo is equated to stability it proves to be inimical to popular movements. Governments which promise not to change the balance of power tend to be drawn from the elite who carefully guard their prerogatives; they are apt to be governments by patronage and largess with little popular participation or representation.

Moreover this whole process is overshadowed by the real possibility that, in order to ensure the effective administration of the aid that we proffer, we might be forced to take over practically all government functions.

A most important aspect of this dilemma is its impact upon our own government and ourselves. If we "took over" the government of Vietnam, our national state of mind would be truly schizophrenic: at home we attempt to conform to the characteristics of a liberal democracy; abroad we become a colonial power even if only with respect to one foreign country.

As an antidote to the popular revolution, the U.S. has adopted a policy of supporting social, economic, and political reforms within the government while at the same time providing military support. The U.S. thus counters with a middle-class-led evolution combined with suppression of violence, and this constitutes the basis of our counterinsurgency strategy. A simplified version of the evolution-revolution confrontation is presented below.

	EVOLUTION	REVOLUTION
• Appeal	Primarily urban	Rural
• Social Change	Effected by reform and evolution; attempts to maintain stability	Effected by rapid, violent, ideologically motivated means; thrives on lack of political stability
• Popular Basis	Small	Large
• Leadership	The economic determinants for the existence of a strong and politically active middle class usually are missing. Leadership is limited to a small group within the middle class and/or the military.	The economic and political determinants for the existence of a large, restive population ready to be harnessed by the revolution are usually available. The leadership is drawn from the underprivileged--the "revolutionary masses."
• Leadership Motivation		
(1) Negative	Success of the evolution leads to short-term losses to the privileged few.	Long struggle
Intensity	Strong	Weak in the beginning tends to become stronger.
(2) Positive	Prospect of long-term gains for everybody.	Lower classes have little to lose and much to gain--both the leadership and the "masses."
Intensity	Weak	Very strong
• The Incumbent Government	The evolutionary leadership and the government tend to have more in common with each other than with the population.	The revolutionary leadership exploits to advantage the differences between the "revolution" and the "system."

THE VIETNAMESE VIEW OF THE STRUGGLE

U.S.-COMMUNIST CONFRONTATION

There are certain factors which are particularly important to a review of the political environment. From the point of view of the U.S., the struggle in Southeast Asia is basically a confrontation with communist expansionism. We support the Government of South Vietnam primarily in order to stabilize it so that it will be able to withstand the spread of communist influence into the South and the rest of Southeast Asia. To the Vietnamese, however, this is not a confrontation of ideologies; for them it is, at least in part, a civil war. As was true in our country in the 1860's, families are split, brothers are fighting brothers, and in this context the enemy is seen in a significantly different light.

Contrary to popular belief, the Vietnamese people are underdeveloped in material aspects only. They are the inheritors of an ancient culture and even the "lowly peasant" is not as unsophisticated politically as might be supposed. Although he might express his ideas of freedom and democracy in phrases that differ from ours, his feelings are very akin to ours with respect to what he wants out of a government and the importance of his role in it. He is not so much interested in what the government thinks it should do for him as he is in what he thinks the government should do. The variants of political beliefs are quite as numerous in Vietnam as they are elsewhere in the modern world. The political bipolarity which we often ascribe to Vietnam is certainly more apparent than real.

PEASANT HORIZON AND NATIONALISM

At this time there is a strong nationalistic element both on the side of the GVN and on the side of the NLF. Despite the fact that the average villager is often

considered to live in a very small world bounded by his local interests, we are more inclined to believe that there is really a very deep-seated feeling of belonging to a nation which constitutes a common bond among Vietnamese. Their concept of "nation" might be different from our sense of the word, but it is, nevertheless, real and constitutes a definite tie which relates one Vietnamese to another. The very strong nationalism on which the Viet Minh organization capitalized in the earlier struggle against the French and the very definite nationalistic element which is now a component of the NLF are evidence that being "Vietnamese" is of fundamental importance.

Then the question arises that if there is a country and there is a nationalistic feeling, where is the evidence of patriotism as we understand it? The world of the average Vietnamese is divided into two--the "we" and the "they." The people are the "we" and the government is the "they." When a man is drafted into the Army of Vietnam, he is drafted into the government's Army; it is not his Army, and therefore he does not feel any more allegiance or patriotic fervor than would a mercenary in a similar situation.

GVN IMAGE

The average Vietnamese citizen considers that it is a kind of game to play with the government to avoid either paying taxes or obeying its rules and regulations. He is not sure that the government has his best interests at heart because he is not an integral part of the government. To him the government is a bureaucracy; it is unresponsive and unreliable, its promises are not often kept, it makes demands upon him which run counter to his will, and, most importantly, he has no means of redress or of criticism.

Americans often ask themselves why the average Vietnamese does not seem more prone to take upon his shoulders the fate of his country, or in other words to work out his own salvation and not to appear to rely upon the United States to solve his problems. We do not think that the Vietnamese citizen would show reluctance to be patriotic and to make sacrifices if he felt in his heart that there was a worthwhile cause.

Obviously, he will not make deep sacrifices just to keep a Diem regime in power or to sustain a junta of generals.

We are often told that the way to "win hearts and minds" is to give the Vietnamese peasant a better life and thus enhance in his mind the image of the government. Certainly material benefits if intelligently chosen and appropriately offered will not be resented. In exchange for these benefits he may well be inclined to offer a certain degree of his support to the government when it suits him, but certainly he would not consider this fair exchange for the kind of sacrifice which we consider a patriotic citizen should be ready to make for his country.

Therefore, when we talk about pacification or Revolutionary Development and we expect it to have more than a temporal impact, it must not be overlooked that the characteristics of these people are no different from those of any other citizens who understand what "taxation without representation" means.

CHARACTERISTICS OF THE POLITICAL CONFRONTATION IN VIETNAM

NLF APPEAL

The confrontation has on one side the U.S./GVN, which is decisively superior militarily but lacks political organization and motivation. On the other side is the NLF, which is relatively weak militarily but appears to possess an effective political program firmly founded on three issues of crucial importance to the average South Vietnamese:

(1) Social mobility--the promise of a better social and economic status.

(2) Political power--the promise of government of the people, by the people, and for the people through the instrumentality of the NLF/PRP, which is very plausible given that (1) is accepted.

(3) Anti-U.S., anti-colonialism--this puts the struggle into the context of a Holy War of Liberation rather than the much less palatable one of a civil war.

The NLF has built an impressive political apparatus in the last four years. Through its cadre, the sinews of the organization, this program has been brought persistently before the rural population. The potency of the appeal lies in convincing the individual of his importance as a member of a functional organization with which he can identify.

GVN COUNTER

The GVN presently appears to have no effective counter to this appeal, nor does it have the political organization to act as a communication channel* to apply ideological countermeasures.

---

*See Viet Cong by Douglas Pike.

The two sides pursue their respective goals with the tools at their disposal:

(1) The U.S./GVN by primarily military means with barely enough "political" activity to preserve a semblance of viable government,

(2) The NLF by continuously improving its political apparatus with enough military action to assert its open defiance of the GVN.

The staying power of the NLF appears strong enough to withstand military setbacks short of annihilation. As long as this situation pertains, neither side can expect to succeed. Their antisymmetric positions make unacceptable to either side a negotiated settlement which does not recognize the respective advantages of the antagonists.

SOCIAL CHANGE

Other than RD, activities of the GVN central government authorities seem to consist primarily of law enforcement combined with largess,* the latter made possible by the U.S. Elections (even disregarding the possibility of manipulation) are meaningless if they are held only to legitimize the existing system, for at best, the elections offer a choice of law enforcement officials rather than popular representation. This assessment is supported by:

(a) Gen. Loan's directive excluding communists, neutralists, and individuals of doubtful loyalties (sic!) from running for office; and

(b) The fact that often the village slates appear to be drawn up by the district chief to be personally acceptable to himself.

---

*"Tenant Farmers Speak," a report of the National Convention of the Vietnamese Federation of Tenant Farmers in The Vietnam Observer, March 1967, contains the following typical excerpts:
"We must not forget that revolution cannot be realized in the countryside by distributing soap, clothing materials, ground corn, fertilizers. We should not consider a rural revolution merely as an aspect of law enforcement by Government employees. (emphasis added)
"We should mobilize the people's potential in order that they themselves will actively take part in the implementation of that rural revolutionary policy.
"A rural revolution must be carried out by the rural masses themselves and not by the Government Civil Service." (italics original)

The appeal of a "grass roots" political (party) organization, regardless of its coloring, is its potential to provide the rural population with legitimate means to change the present government-by-largess and -privilege into one where grievances and aspirations are satisfied as a matter of right rather than privilege. While there are social feedback mechanisms other than political parties, the latter have historically demonstrated the greatest efficacy.

INTERDEPENDENCE

The required degree of national cohesiveness of the political organization, and the need for a strong central government, can be considered to depend upon the level of interdependence* of the elementary social units of South Vietnam. In view of its predominantly rural character and the largely self-sufficient village--in other words, a low level of interdependence--it would seem that strong central control is not only unnecessary but actually unenforceable at this early stage in the country's national development.

This observation also tends to bare the secret of success of the NLF's political organization. It is hamlet-village based and in classical republican fashion, through intermediate echelons, reaches the top government level (indirect suffrage). This system, moreover, is compatible with the traditional Vietnamese government structure. Attempts by the GVN to impose a political structure have failed because the fact of the weak interdependence has been ignored.** To put it in its simplest terms: the farmer does not need Saigon, but Saigon needs the farmer. It is this fact that lets the farmer hold out and ignore the government. For the farmer to acquire a vested interest in the government, he must be made an integral part thereof. This

---

*See Appendix B.

** Pike (op. cit.) points out that the NLF has clearly recognized that it is necessary to increase the level of interdependence in order to establish a strong central authority: "[the NLF] sought to create a new system of formal and informal groupings by which the socialization was to be accomplished and behavior regulated. The NLF cadres made a conscious and massive effort to extend political participation even if it was manipulated. . . ."

has historically been achieved through political parties and not by identification with the bureaucracy.

MOTIVATION

Among the many political parties in South Vietnam there are none now well enough organized to have more than local followings except the PRP, and none are being encouraged. It is in this political vacuum that the Revolutionary Development (RD) cadre must operate. It is our opinion that as long as this political vacuum continues, the RD efforts will not be productive in establishing a self-perpetuating representative government system. Although under such conditions the countryside can be "secured" by military force, it cannot be "pacified" to an extent that the force can be withdrawn.

PACIFICATION

"Pacification," as we understand it, encompasses all those activities aimed at enabling the people to accept willingly the central government as the instrumentality for the satisfaction of their political, economic, and social grievances and aspirations. Pacification concurrently embodies those activities aimed at enabling the government to execute their responsibilities for the satisfaction of the people's grievances and aspirations.

It is our assessment that at this time the level of interdependence is too low to warrant the need for a strong central government. It is not at all clear, however, that anything but a strong central government would be compatible with U.S. objectives in Southeast Asia. Should this be the case, then much larger emphasis must be placed on the enhancement of interdependence.

Communist governments have recognized the importance of achieving a high degree of national integration in a relatively short period of time; toward this goal forced collectivization has been ruthlessly pursued in the USSR, Cuba, China, etc. The forced collectivization process still turned out to be a lengthy one, resisted by the farmer every inch of the way.

Grass roots functional organizations such as farming cooperatives with a number of provincial resource outlets, centralized storage, and marketing and transportation facilities, appear as effective means to increase the interdependence as well as means to instill a feeling of belonging to a national organization. It is crucial that the organizations be initiated by the people themselves rather than by government employees. The government should, however, provide financing, plans, and incentives to get such programs started. Progress, however, will be measured in decades rather than years.

In addition to the ideological difficulties besetting pacification, there are some mundane problems common to almost all developing nations:

- The choking effect of a stratified bureaucracy
- The limited number of capable, trained personnel who are available to administer programs effectively
- The existence of petty and grand corruption
- The inability of the bureaucracy to plan and make decisions

Problems that both the NLF and the GVN have to grapple with are:

- Regional factionalism
- Religious animosities
- Tradition of lawlessness in some parts of the country
- Peasant loyalty to his family
- Disruptive influence of the war
  - A. Economic security
  - B. Personal security and welfare
- Widespread political disinterest

In most cases these problems are due to behavior patterns which can only be changed over a long period of time. We have noted varying degrees of improvement in comparing the present situation with earlier ones. But more important of all we see no appreciable change in the most basic issue, the establishment of a government as an extension of popular will and popular identification.

MATERIAL BENEFITS vs IDEOLOGY

CONTENDING CASES

Successful pacification implies a situation in which more than apparent stability has been achieved. Two schools of thought advocate different prerequisites to accomplish this state.

One side argues that the essential element is the provision of security and of material benefits. The argument is further buttressed by citing the past 25 years of Vietnamese history which consisted of almost continuous struggle, and it is asserted that what the people want above all is to be left alone and to survive. We have observed in fact that considerable progress under conditions of guaranteed security can be attained without any additional effort.

Material benefits, so the argument goes, demonstrate the government's interest in giving the peasant a better life, enabling him to grow better crops with less work, providing him with easier access to markets, and offering him and his children educational opportunities. Programs of this nature cannot help but achieve pacification, we are assured.

On the other hand, there is a body of opinion--to which we subscribe--that considers security equally essential, but insists that no program which is devoid of political and ideological content can result in permanent pacification. There will be conditional pacification as long as security is maintained; however, when it is removed, regression is bound to occur in almost every case. This will occur whether the farmers receive material benefits or not. In other words, security cannot be traded off for political action. The history of pacification in Vietnam bears witness to this contention (see Appendix C).

ORIGIN OF RD

The Revolutionary Development program grew out of the recognition by the GVN for the need to provide more than what we have earlier called "largess." The political orientation and training of the RD teams, inadequate as it may be, attest to the real nature of the RD mission: to sell the GVN politically. The flaw in the RD concept appears to be that an attempt is made to organize the countryside from above, rather than from the bottom up.

We think that the relative merits of these two approaches to pacification must be carefully considered. We question the justification for the additional financial burden which material programs of so little strategic value place upon our commitment at this point.

U.S. CONTRIBUTION

It might well be more productive for U.S. agencies to concentrate on the development of plans for long-range projects with the idea that at an appropriate time they could be turned over to the GVN for implementation. U.S. expertise could thus make a meaningful contribution in an area where the GVN almost totally lacks the necessary manpower and personnel. Such an approach would be much preferable to one which pressed for current implementation in many fields, particularly at a time when the national government is struggling for its very existence.

RD CONCEPTS

Before assessing the efficacy of the RD team, it seems appropriate to examine the concepts first.

WHY RD

In Vietnam the regular hamlet-level extension of the GVN's executive branch and ministries has proven inadequate to meet the challenge of a well-organized political opposition, particularly when backed by the use of force. Popular allegiance is contested by cadres representing both the NLF and the GVN. RD is a technique for the creation of an atmosphere conducive to the reestablishment of normal governmental functions. As such it constitutes a government-populace interface at the lowest level. There is no doubt in our minds that RD is a key component of the pacification program. The close contact of the RD teams with the people requires that the cadre possess the requisite unusual characteristics which would instill confidence in the farmer.

RD is ostensibly based on two concepts: security and political action. In fact, they function together:

(1) By removing the effects of the underlying causes for violence by military means, and

(2) By removing the causes for violence by political means.

The task of the military, paramilitary, and police elements is primarily to enforce (1). RD is an attempt to address (2).

In order to implement security by military means, it is not necessary to identify the causes of violence. For the political approach to bear fruit, it is essential that

(a) the true causes be identified, and (b) that they be permanently removed, i.e., believable safeguards must be established.

NATURE OF DISSENT

Let us first establish axiomatically that governments as well as individuals resort to violence only if peaceful means to achieve their objectives have either failed or do not exist. In the development of an insurgency one often finds that after negotiations have broken down once, the vehicle to continue or to reestablish negotiations ceases to exist. Specifically, an incumbent constitutional government which fails to satisfy the demands of the potential insurgents is likely to be replaced by a military government, either before or soon after the open rebellion breaks out. More likely than not, opposition parties are outlawed and the channel of communication with the discontent is cut. In Vietnam one can argue that such a channel hardly ever existed.

If this scenario is adequate to describe the situation in Vietnam (disregarding any possible designs that the DRV may have) then one would conclude that the first order of business for RD would be to establish a channel of communication between the populace and the government. This indeed is the function of the RD teams. It follows from our deduction that the concept is sound--now let us look at the implementation.

IMPLEMENTATION

The channel is to be the team itself. Here is where the implementation fails the concept. The Vietnamese Federation of Tenant Farmers statement bears repeating here:

> "A rural revolution must be carried out by rural masses themselves and not by the government civil service."

We support this view unreservedly. The function of the RD team should be to help the farmers to organize themselves into politically effective organizations

which in time can serve as the vehicle for the transmission of the farmers grievances and aspirations to the government.

What are then the prerequisites for a successful cadre man? Above all, he must be a competent organizer. It is well to remember that in a multicomponent system organization is the key to success.

One of the most serious difficulties that the RD cadre experiences is to convince the farmers to support the government. This concept must appear rather nebulous to the farmer on the one hand and imply some vague obligation on the other hand. Should he, however, be urged to establish, support, and participate in an organization that is to represent him to the authorities, he is more likely to become involved. This, in fact, is very much the pattern followed by the existing political parties, such as the Dai Viet, the VNQDD, and the GVT (Vietnamese Federation of Tenant Farmers). The Hoa Hao and the Cao Dai have in addition the religious bond which tends to foster conformity (these facts were pointed out to us by Prof. Milton Sacks, an expert on Vietnamese political parties).

It is regrettable that this view of the primary function of RD is not universally recognized. The situation of February-March 1967 in Binh Dinh province might retrogress rather quickly in the event the large security forces have to move from the area. Here a district (Phu My) was swept through and the VC underground allegedly was largely eliminated. Due to the unavailability of trained RD teams, the political and organizational vacuum was filled by 12-men teams which were locally recruited by the province chief and were given a very short indoctrination. The tasks laid on these teams differed in only minor aspects from the tasks to be accomplished by the Vung Tau trained teams. Material benefits were provided to the farmers and a census, grievance, and aspiration cadre has been established in each hamlet. We doubt that permanent inroads can be achieved in this manner against the insurgency and its causes.

Of all the pacification cadre, the Force Populaire stands out as the most successful (see Appendix C). The definite political orientation and motivation of the

Force Populaire, and the careful selection and training of the cadre give credence to our insistence that political orientation and careful training deserve the highest priority.

INFRASTRUCTURE

High on the list of tasks to be achieved by pacification is the elimination of the infrastructure. The official MACV version as to what constitutes the infrastructure follows:

> "The Viet Cong Infrastructure is defined as the political and administrative organization through which the Viet Cong control or seek to control the South Vietnamese people. It embodies the party (Peoples Revolutionary Party) control structure, which includes a command and administrative apparatus (Central Office South Vietnam) at the national level, and the leadership and administration of a parallel front organization (National Front for the Liberation of South Vietnam), both of which extend from the national through the hamlet level."

THE PRP

As indicated, it embodies the Peoples Revolutionary Party, a bona fide communist organization, as well as the National Front for the Liberation of Vietnam. The PRP has in its ranks an unknown but probably sizeable number of ideological communists while the preponderant faction of the NLF are alliance communists.

We made a determined effort to uncover whatever information is available regarding the infrastructure; in brief, the results were disappointing. There exists a plethora of political order-of-battle charts which are assiduously kept up to date; names and aliases of alleged members of the infrastructure are collected in large quantity and stored in an impressive array of automatic retrieval consoles. But questions about the manner and means whereby the infrastructure exercises control over the population remain largely unanswered. The range of authority of political commissars is believed to be wide--how wide is not clear. It is surmised that

authority rests ultimately with the PRP, but how much of that is shared with non-PRP members of the NLF is a matter of conjecture.

The extent to which Hanoi influences or directs the conflict is uncertain. It is an established fact that the PAVN are under direct operational control of Hanoi, but whether the VC-Main Force units are under the same degree of control is not clear. The extent to which regional guerrilla units are subject to extra-regional control is not known.

Whether a member of a local guerrilla unit is to be considered a member of the infrastructure or not determines his status when apprehended. Members of the infrastructure are considered civilian offenders, whereas a combatant ought to be treated as a POW. This situation is further exacerbated by the fact that the Vietnamese apparently do not have a word in their vocabulary which is equivalent to infrastructure. These facts were established in extensive conversation with the staff at CICV and MICV.

Considering the tremendous effort that has been put into the "identification and elimination of the infrastructure " and examining the meager results, one is led to wonder whether there is a clearly identifiable organization that fits the theoretical description and functions to control the South Vietnamese people. In this light the concept "infrastructure" takes on attributes of "the Establishment": there is universal insistence that there is such a thing as the Establishment, but it is easier to identify those who do not belong than those who do, and it is exceedingly difficult to determine and to describe specifically how the Establishment functions.

SOCIAL CONTROL

One of the major difficulties lies in the fact that social control is exercised in a number of subtle ways in addition to law enforcement. Any functioning government relies on a certain amount of good will, consensus, persuasion, molding of public opinion, etc. These almost intangible forces continuously probed by public opinion polls are fostered by the mass media of communication and by the wielding of

influence by respected individuals and organizations. Ho Chi Minh, though obviously not a member of the infrastructure, exercises indirectly probably more social control than many of the high-level PRP functionaries.

As to the administrative apparatus of the infrastructure, or underground (which we consider a more descriptive term), in many parts of South Vietnam it is the only government in existence, and the destruction of this apparatus would serve no particular purpose. The lifeblood of the insurgency is the political and the military cadre. It is our view that efforts should concentrate on the elimination of the cadre, not on disruption of the administrative apparatus, which such operations as COUNTY FAIR, VILLAGE FESTIVAL, and CORDON SEARCH tend to achieve. Furthermore, all avenues must be explored to reach an accommodation with the local power structure.

To a large extent accommodation is in fact the procedure followed by the Vietnamese. As best as we could establish, the Vietnamese try to stir up the population as little as possible. A village chief might announce, sometimes by name and sometimes not, that he knows who certain underground functionaries are. At the same time, he might tell the assembled villagers that as long as no acts of violence are committed in their village, everybody will be left alone.

EXTRACTION

This approach has not been observed long enough to establish its applicability to pacification efforts. One thing, however, appears certain: in those areas where no violent "infrastructure extractions" have been attempted a degree of tranquillity prevails. How real this is, is hard to say. At least this atmosphere offers the GVN the opportunity to engage the population in a relatively secure environment. Failure of the GVN at this time to impress the villagers with their sincerity is likely to have serious consequences. In this condition of neutral stability, the villagers are sitting on the fence, waiting to be shown what the GVN is ready to do; they are not about to commit themselves with the VC guerrilla enforcers breathing down their neck. Trying to push too hard at this time is apt to be counterproductive. It also appears

unwise to use the Census Grievance section of the Revolutionary Development teams, as well as the static CG cadre for primarily intelligence purposes. Not only is it unclear as to the usefulness of the information gathered at this time, but it also means that the villagers are again promised things that they either do not need or will not get.

It is well to constantly bear in mind that the NLF is promising the farmers very little in terms of material benefits--it is mostly ideological and emotional fare. In spite of this, the NLF has been able to control a significant portion of the population. The extent to which terror has been used has probably been overstated (e.g., see Pike, loc. cit.), and even the terror that has been used by the NLF has been directed mainly against GVN officials rather than ordinary farmers. Whether terror against GVN officials is effective as a lever to control the populace which has no particular allegiance to Saigon, is open to question. The very existence of terror, admittedly, tends to keep the mailed fist of the NLF in plain view and probably discourages open dissent from the uncommitted.

SECURITY

MILITARY SECURITY

Security is such an important ingredient of pacification that in the quest for the elusive formula to attain it the problem became oversimplified. Security was defined in military terms and the solution that evolved was not unexpectedly based on military criteria. The problem of security during a state of open rebellion, politically motivated, is infinitely more complex.

The provision of security by military forces only in a country of 15 million, of which probably one-half are not pro-government, is patently impossible. The consistent failure of the "oil spot" concept bears witness to this fact.

The oil spot concept expresses the recognition that security must be established in an area and not just at scattered points. It is obvious, therefore, that in order to, say, double the size of the oil spot one needs four times the number of troops.

Quantitative Analysis

There are roughly 10,000 hamlets in Vietnam. The current practice is to station about 150 men, in addition to the RD team, in each hamlet undergoing pacification. Were this procedure to be followed universally, one would need of the order of 1.5 million men just for hamlet security duty. This is hardly a feasible undertaking. While we are certain that the enormity of such an undertaking has impressed itself on the military authorities, we did not find that alternate means for the achievement of security have been seriously explored. It is recommended that the Research and Development community study the problems of hamlet security for the applicability of modern technology. If, for instance, a hamlet could be secured by 15 rather than 150 men, the necessary manpower could be found. It must be kept in mind, however,

that militarily imposed security is no substitute for political stability.

An effective way to improve the Vietnamese security forces is to combine them with U.S. forces. In the I Corps Tactical Zone, the III MAF has developed Joint Action Companies/Combined Action Companies (JAC/CAC). The concept here is to combine Popular Force units with well trained and carefully selected U.S. Marine Corps men to increase the confidence and morale of the Vietnamese. These integrated units moreover provide an effective link between FWMAF units in the area and the Popular Force elements. To the farmers, the CAC's project an image of equality between U.S. and Vietnamese servicemen, and tend to counterbalance the anti-U.S. sentiment. The application of this device to other CTZ's certainly deserves study.

Military security forces are comprised of ARVN and RF/PF elements. Interior, i.e., hamlet and village security is augmented by the security element of RD teams (34 men) and, as they become trained, Hamlet Self-Defense groups. Other diverse, armed personnel are present in the hamlet and make a contribution of sorts to local security. An apparently competent district chief decried the inadequacy of these quasi-military security forces and the problems which the many weapon-carrying individuals created for him.

The problem of achieving effective coordination and control of security forces has been solved in some provinces by putting them under the operational control of the most capable military commander in the area, usually the district RF commander. This arrangement included even the security element of the RD team. Although the solution appears to have merit, it deprives the RD team of its bodyguard and results occasionally in their deployment in missions such as night patrols and ambushes for which their training is inadequate.

Apparent/Conditional Security

Areas which have lapsed from the pacified status into uncertain or definite VC control often demonstrate the phenomenon of apparent or conditional security. When stability is the result of military presence and, perhaps, programs in the "largess"

category, it is conditional upon the continued presence of these forces, whether or not the infrastructure remains intact. Since the ability of the NLF to focus their military resources everywhere at once is obviously limited, there will always be areas in which apparent security will exist. In these areas, a dialogue leading to accommodation can be undertaken with somewhat more impunity. The threat of enemy reaction must be kept in mind, but if his organizational base can be effectively subverted while his back is turned he will have difficulty in re-establishing his presence. In such an area, the insertion of military forces may upset the delicate balance prevailing and evoke a VC response which will compromise earlier progress.

Effect of Counterforce/Counterguerrilla Operations

Counterforce and counterguerrilla operations are crucial to the total security problem. Pacification is the result of the combined effect of many factors which bear upon its success or failure. Military operations against the enemy's conventional (although they do not operate conventionally) Main Force units, secret havens, and base areas do more than just impose attrition. They destroy his confidence, create difficult command and control problems, and severely reduce the important administrative efficiency which is essential to the proper management of his complex organization.

POLITICAL SECURITY

As another and more likely alternative, security may be obtained by means of accommodation to and dialogue with the indigenous power structure.

Dialogue

The strategic function of the RDC is to complement the military forces with political action to help provide rural security and enable the ordinary functions of government to proceed. The latter can be achieved only if the villagers can be engaged--this engagement must start with a dialogue between the emissaries of the GVN and the representatives of the local counterauthority and the committed or uncommitted population. While there is no assurance that a dialogue can always be

started, still the experience in Vinh Binh is an encouraging sign. In order for this approach to be promising, some fundamental changes with respect to the RDC have to be implemented.

1. The training must emphasize the need for this dialogue.
2. This cadre must be intellectually and emotionally ready for it.
3. The emphasis in the training on learning by rote must give way to the teaching of concepts.
4. Teaching of generalities about democracy, the just cause, freedom, etc., must be replaced by emphasis on the political program that is to achieve these goals. It cannot be over-emphasized that the key to success is a clearly understandable program with achievable intermediate steps. (The VC have been able to engage the population without any heavy-handed communist indoctrination. The villagers are interested in the present and the near future and not in a description of the millenium.)
5. The political parties of SVN should not only be permitted but must actually be encouraged to participate in the political education of the cadre.
6. The need for a security element as an integral part of the RDC should be reexamined.

Accommodation

It appears that from the top echelons in the VC political apparatus down to the lowest level in the village and hamlet, there are all the shades of red. There is widespread belief that the top echelons are well indoctrinated, dedicated communists. There is almost equally widespread belief that on the village and hamlet level communist influence is often minimal or nonexistent. That points to the fact that the difficulties which the GVN experiences in asserting its authority through the provincial government in the rural areas is apparently also experienced by the VC governmental structure. In other words, the top echelons of the VC apparently have not been able to break down the distrust of the rural population of an external government apparatus. This chink in the VC armour must be exploited. The relative independence of the village chief who is collaborating with the VC is a lever that must be utilized and not destroyed by replacing him with an outsider.

There are indications to the effect that in areas that are securely under VC control, and to a lesser extent in contested areas, there prevails rural security as well as acceptable (by the villagers, that is) local government. When such an area is being "liberated" by the armed forces of the GVN, it is now they who destroy the security prevailing. Military activities interfere with day-to-day government functions which were provided by the local authorities which often have done no more than found a modus vivendi in a bad situation. That any interference on the part of an organization not noted for its sensitivities to the needs of the farmers should embitter the population against the GVN is not unreasonable--this is the great strength as well as weakness of the VC insurgency. Because it is here that the government can drive a wedge between the rural population and the insurgents by establishing a dialogue with the local power structure--the underground. Constructive, slow accommodation is called for rather than surgical excision of the "infrastructure."

We are convinced that a wide implementation of this approach, coupled with an adequate political program, is the only way out of the fantastic manpower required to impose military security. We are certain that an accommodation cannot be reached everywhere, and moreover cannot be effective if sole reliance is placed upon it. The shield of the counterforce and counterguerrilla operations is necessary for success.

POLITICAL-MILITARY COMPARISON

The stabilization of a society which is based upon the presence of military elements is conditional upon the continuing presence of these elements. Their removal can be expected to effect a reversion to the original orientation. Stabilization by means of accommodation or reorientation on the other hand can be more basic and permanent in nature since the political orientation of the community has been established.

CONTROL OF MILITARY UNITS IN SUPPORT OF RD

The problem of control is exceedingly complex. The desire to retain control of military units by the military hierarchy is understandable and has considerable merit. The military logic asserts that until the enemy's military threat is neutralized, there is little real hope for permanent progress in pacification. On the other hand, if the central thrust of the confrontation is really political and the role of the military is primarily to support Revolutionary Development, control should be vested in the executive agency of the government at the appropriate level.

The problem is quite real--without security, progress of any kind will not occur. On the other hand, security must support RD and pacification efforts which are crucial to the achievement of the national goals. At present, all Province Chiefs except one or two are military officers. Under the prevailing military government, the head of a ministry is called a Commissioner General. Important military and political matters are handled through channels which include the Province Chief, Corps Tactical Zone Commander, and Saigon. The establishment of a civilian government in Saigon or the designation of civilian incumbents as political chiefs at the different administrative levels will require the reinstitution of separate channels. Such an occurrence will surface the military-political control issue which existed under Diem and which now under the stress of more intense violence will undoubtedly add a dimension to the problem. A particularly sensitive aspect will be the need to redefine the role of the Corps Commander since he now has what is ordinarily described as "war lord" status.

One high American military authority has made the matter quite clear by pointing to the changing roles of the military forces as the insurgency devolves. He favors control by the military when the threat is mostly military. He sees a subsequent shift to the executive agency when the military is committed in support of Revolutionary Development. It will be necessary in any event to retain a certain proportion of the available military resources under military control as a counterforce deterrent or for other contingencies. Control could be relinquished by varying degrees according to

the prevailing situation. The point at which transfer of controls would be effective must be carefully and legitimately established by government decree. We do not feel that there is any reason why such a solution would not be adequate.

REVOLUTIONARY DEVELOPMENT EFFECTIVENESS

Any modification of the RD concept depends upon an evaluation of the effectiveness of the Revolutionary Development team. Such an analysis is hampered by the fact that there have been so many other factors at work in addition to the RD teams that their specific contributions are difficult to assess. The most significant one is the presence of a large security element in the area in addition to the organic RD security element.

SIGNIFICANCE OF SECURITY

The largest element of the RD team (34) is primarily a security force, and all of the team members carry weapons. The team as a whole has the capability not only to protect itself but those who are with them; in fact, the single most important contribution of the RD team might be the provision of an increment of security and little else.

The problem here is the use to which the RD cadre is put. If the cadre is used primarily for security purposes, then their special training is being wasted and they might as well be just part of the RF/PF.

One is inclined to attribute the more evident signs of progress to the prevailing condition of security. The mere presence of armed forces permits hamlet and village life to resume at a normal pace. It permits artisans to go to work; farmers to man their fields, women to go to market. These things are signs of progress, to the extent that return to normalcy constitutes progress. Whether or not RD teams had been present would on the surface appear to have made little difference. However, some advisory personnel who have been able to observe the work of the RD teams at close range opined that they made a very definite contribution, although in most cases they could not be specific as to what their contribution has been.

RD WEAKNESS

On the debit side, there was probably an equal number of advisors who thought that the cadre teams were not properly trained, were not properly motivated, and, in fact, accomplished almost nothing. Near Saigon they had experienced large absentee rates. In the Delta they had refused to do any physical labor. In some cases they were said to consider themselves above the PF and RF elements in their areas because of the fact that they were paid more and had better equipment. In certain other areas they were allegedly looked upon as an intelligence agency of the province or government in Saigon.

We have found that the inadequacies of the RD teams with respect to training and quality are widely recognized. The school at Vung Tau is doing all it can to turn out its product in sufficient quantity and with an adequate level of qualification.

We have considerable doubts as to the appropriateness of having the CIA carry the responsibility for the RD training and supervision. In this connection, the point was raised in several discussions with OCO personnel in Saigon and in the provinces that no other organization within OCO has the capabilities to carry out this function. We contend that the basically covert orientation of the Agency is not conducive to the best management of a fundamentally overt operation. It must be visible to the extent that aspirations are reviewed, reports scrutinized, and progress measured. Contributions to intelligence must be clearly bonus effects rather than carry primary emphasis. We thus maintain that the RD operation might be more effective if it were the responsibility of AID. We note that from the budgetary aspect alone this program will probably constitute the largest single nonmilitary U.S. program.

THE TASKS

Observing the teams in the field have brought us face to face with the details of the 100-odd tasks which must be completed in the course of the Revolutionary

Development process. Many items are couched in general terms, such as "eliminating hate and superstition." We do not feel that such vague generalities constitute an acceptable delineation of jobs which will make worthwhile contributions either to development or a governmental image. A more practical outline of tasks would enable these groups to carry out more effectively their touchy and demanding mission.

Other factors which bear upon the effectiveness of the RD teams are, of course, the effectiveness of those ARVN battalions which have Revolutionary Development support missions. Active and aggressive daily patrolling by these military units and close liaison with the RD elements undoubtedly does a great deal to aid in pacification. Where the military forces have done their jobs well, smaller security elements responsible for local protection of hamlets and villages have often effectively resisted the probing attacks which the VC are still able to launch.

There is a rising sensitivity to the danger that the large number of troops might rekindle some of the age-old civil/military antagonisms which have resulted in much counterproductivity in the past. Although we cannot conclude that the attitude of ARVN in support of RD has changed markedly all over the country, there is nevertheless a very definite reason to be cautiously optimistic at this point.

The effectiveness of the RF and PF units is intimately connected with the alleged requirement for an organic security element to the RD team. To a large extent the arguments offered are an admission of failure to forge the RF and PF into a viable security element. The proliferation of security forces in the villages and hamlets are bound to create jurisdictional disputes and, moreover, exacerbate the existing tensions between the RD teams, RF, PF, and ARVN.

The argument that the RD teams will have no confidence in the protection offered by elements other than their own is specious. If the RD teams cannot be convinced of the good faith and ability of these elements charged with the responsibility to provide security, it is idle to expect that the farmers will trust these same elements.

The solution of this problem is not to burden Vung Tau with the training of paramilitary units but to train the RF and PF so that their performance inspires confidence not only on the part of the RD teams but also on the part of the villagers.

This approach would utilize the available manpower more effectively and moreover relieve the shortage of training personnel at Vung Tau.

RD AND OTHER MINISTRIES

We have been told by several OCO officials in Saigon as well as at the regional level that the present heavy emphasis on RD coupled with the growing influence of the Ministry of Revolutionary Development (MORD) has caused an inadvisable weakening of other ministries which have responsibilities in the larger area of pacification. We were told that there were stringent funding constraints which practically emasculated the budgets of the non-RD ministries.

Conceptually, RD is a transitory stage to be followed by the permanent functions of the regular ministries, as the RD teams move on. In fact, in areas which do not require RD (e.g., among the Hoa Hao) it is important that the non-RD government apparatus be effective on a continuing basis.

In summary, our observations tend to support the view that the current RD concept with all its shortcomings is a step in the right direction. However, the limitations imposed on this program by the massive short-term requirements in the field render the net results uncertain.

GREATEST NEED

With respect to the training of the RD teams, political indoctrination and leadership appear in greatest need of improvement. The first requires probably a fundamental change in the functioning of the GVN and the latter requires extensive training. We are less than sanguine in our prognosis for the correction of either or both factors.

A chart of the GVN organization for Revolutionary Development which depicts the ministerial establishment in Saigon and its directly controlled appendages in the Corps Tactical Zone and at Vung Tau is found in Appendix D.

MEASURING PROGRESS

The methodology for the measurement of progress remains elusive as the search for quantitative criteria continues. For want of a better technique, progress in pacification is measured by dollars committed, work projects completed, tons of wheat delivered, reduction of incidents of violence, inoculations given, outhouses built, cadre trained, etc. These factors, however, have but a limited bearing on the fundamental issue. In retrospect, they have been known to portray a loss rather than a gain. Economic improvement does not necessarily mean greater allegiance to GVN. The benefits of prosperity, for example, which result from some programs are reaped by the VC in the forms of higher taxes and increased produce.

The measure of efficacy of the pacification program must eventually be the percentage of hamlets that have undergone the pacification program and have been classified as "pacified" and "secure," and that remain pacified and secure after the security elements have moved on. No reliable index presently exists because allegiance is difficult to measure and "hearts and minds" resist quantification.* It is well to bear in mind that a basis for uniformity and generalization is as rare in Vietnam as in any other newly established social structure. It is common for procedures to vary widely, for the leadership is forced by circumstances to extemporize. There are consequently as many variants in the solutions to problems as there are province chiefs. In addition, of course, there are variations in such large-scale

*The recently developed HES index or Hamlet Evaluation System establishes criteria to indicate the degree of Saigon's control of the population. This is done on a hamlet-by-hamlet basis, with A, B, and C categories meaning hamlets which are more or less secure and the D and E categories meaning hamlets which are more or less insecure (this is apart from the Viet Cong hamlets. However, the efficacy of HES to measure allegiance of the population to the GVN rather than control of the population by the GVN has been questioned.

factors as geography, demography, etc., which must be accommodated. The quality of leadership at all echelons is crucial. In almost every instance one finds the important element of success is the ability and character of the leader rather than the modus operandi. Furthermore, one almost invariably finds as a contributory factor a close friendship between the key Vietnamese and his American counterpart.

We have nothing but the highest praise for these U.S. advisors, many of them young captains and majors who are really the unsung heroes of this war. Operating often under unbelievably adverse conditions, trying to communicate in a language that they do not understand, dealing with nonmilitary problems for which they received limited guidance--they keep their sense of perspective. These young men are truly a credit to their profession. This is one of the few aspects which permits of generalization.

ORGANIZATION FOR RD

The organizational aspects of Revolutionary Development are so complex that a comprehensive study of it alone would comprise a large volume. Since the purpose of the PACKARD study is informatory as well as exploratory, a few of our most relevant observations are noted here.

The U.S. involvement in and the lessons learned from RD and pacification are of great significance for the future. We have noted the central setting of "rising expectations" or "emerging nations," as the stage setting for our military and foreign policies. We believe that in such an environment there must be a further and much more intimate integration of the functions of the State and Defense Departments. The Office of Civilian Operations, OCO, in Saigon is perhaps the first recognition for a functional organization of this type. We have noted its effectiveness in integrating those programs within the civil side of the U.S. mission which affect RD. Through its good offices, and as encouraged and assisted by MACV, OCO has demonstrated concrete evidence of better planning, closer coordination, and a real effort to establish a proper repository of managerial responsibility for problems which are not easily categorized as coming under either military or civilian jurisdiction.

At the province level, we noted that AID/OCO problems and representations often took a position of secondary importance behind the military ones. This is obviously related to the fact that in almost every case the province chief is a military man and his closest counterpart is a senior U.S. military advisor. Military problems also have a way of seeming to be more acute and immediate in nature. Also particular personalities appear to have a great deal to do with the relative standing of the military and civil advisors. To improve this situation we see a need in the future

for an even closer and perhaps more fully integrated military-civilian successor to OCO.*

In Saigon, we have noted that the demands for program implementation and management create a vortex which consumes personnel resources at such a rate that there is no one left for conceptual evaluation or really basic analysis of fundamental aspects. Thus we have the not unusual phenomenon of everyone striving hard to solve what may be the wrong problems. A possible solution involves the addition of qualified people to act as an advisory staff. They should be sufficiently closely placed to the leading official that they can be fully up to date. At the same time they should not become enmeshed in the specific machinery of planning, implementation, and evaluation. We suggest that the head of OCO have a small group of advisors of this type at his disposal and that it be organic to his office.

We also note that a variety of different studies and research investigations are under way on different aspects of the pacification program.** More are needed. We also propose that these efforts be followed and summarized for the OCO chief by a suitably experienced scientific advisor such as is now available to the military commanders at MACV and CINCPAC.*** This scientist can serve as a focal point

---

*In May 1967, the civilian and military establishments in Vietnam were united in a single pacification program under the direction of MACV.

**RAND Corporation, Pacification Force Requirements for South Vietnam, RM-4421-ARPA, C. V. Sturdevant, March 1965.
Military Assistance Command, Vietnam, Definitions of Commonly Used Terms for Pacification and Associated Military Operations Conducted Under the Pacification Plan of South Vietnam, July 15, 1964, (CONFIDENTIAL)
Research Analysis Corp., Field Office, Vietnam, Log SGN-4710, Statistical Indicators for Measuring Pacification Progress on the Republic of Vietnam, (published in three volumes).
Research Analysis Corp., Pacification and Long-Term Development of Vietnam: Questionnaire Analyses, RAC-TP-226, D. L. Morell and A. Viilu, May 1966.
American University, Rural Pacification in Viet Nam: 1962-1965, W. A. Nighswonger, May 1966, (thesis) (CONFIDENTIAL)

***This proposal has since been implemented and an assistant to the Military Assistance Command Scientific (MACSA) has been appointed.

for interpreting and stimulating the contributions of the scientific community in this important endeavor. The recent subordination of OCO to MACV indicates the need for a review of procedural channels for research and development in the DOD/State/AID/CIA community in Washington.

The characteristics of the governmental organizations in South Vietnam today have been inherited from previous governments. The traditional bureaucracy with its "functionaires" is much in evidence as we have noted in our previous comments (see p. 15). Appendix E, which depicts a typical provincial government of about 2000 functionaires, illustrates the extreme organizational complexity characteristic of Vietnamese bureaucracy. This is a rather generic description since there are variations in basic organization and strength from one province to the other. The chart bears mute testimony to the kind of governmental management which has adversely affected in many cases its ability to present a desirable image to its people.

THE URBAN SITUATION

The tendency is to be concerned almost solely with rural problems which involve the "grass roots" and the "countryside" since that is where the target has been. But combat operations and other hardships have resulted in a massive flow of people into the cities. Actual numbers involved can only be estimated, but reduced agricultural production and abandoned farms which dot the countryside bear witness to this migration. This situation has all the ingredients necessary to create an antigovernment urban (lumpenproletariat) —rural alliance. Urban violence could cripple the GVN since the cities are the foci of governmental agencies as well as the sources of many supplies for the outlying areas. Police agencies would be incapable of coping with a real threat, so that the use of military units in cities would certainly be required. In many cases this might well open rural areas for new penetration and subversion by the NLF. We feel that these problems deserve prompt attention. Somewhat to our surprise there has not as yet appeared a concerted plan on the part of the NLF to capitalize on the potentially dangerous anti-GVN capabilities which these unhappy people and their numerous offspring constitute. History shows that such rural-urban migrations are not reversible. The application of properly designed RD programs to large cities which are swollen with both bona fide and self-designated refugees could well prevent serious problems from developing. There are also much more fundamental long-range problems which this phenomenon could give rise to in the field of nation-building.

THE COUNTERFORCE ENGAGEMENT*

The significant although somewhat indirect effects of the counterforce engagement upon pacification have been pointed out earlier. It is in this area that one of the most important changes has occurred during the past several years.

One of the regional OCO representatives points out that several years ago there was a fairly high degree of certainty in the minds of the people that the NLF would prevail in the long run. Sentiment on this subject has now shifted, we are told, and some see evidence of the conviction that the VC cannot win. It is further opined that this state of mind has resulted in a much greater receptivity of the population to well-conceived programs which the government can launch at this time.

The nature of the counterforce engagement varies from the near-conventional characteristics in the I Corps Tactical Zone to the large-scale, sweep operations such as CEDAR FALLS, JUNCTION CITY, and IRVING. Military authorities point to the success which has crowned these operations. A vast quantity of valuable intelligence has been captured, and the Chieu Hoi rate has more than doubled in some cases over the last few months. Many of the regular PAVN units which have been identified in South Vietnam have been significantly reduced not only numerically but in military effectiveness. The final objective of the insurgents, "the march on Saigon," which at one time seemed almost within reach, has now completely vanished.

Despite their optimism, military authorities are not yet willing to admit that the counterforce engagement has been won. We feel nevertheless that the time is ripe for a reevaluation of the roles and missions of the counterforce elements.

---

*See also Appendix F.

These troops make up a large part of the U.S. presence, and take the lion's share of the cost. Their presence has the further effect of raising the "stakes" to a point at which our courses of action are dictated by the level of our commitment.

The military authorities believe it to be a grave mistake to underestimate the ability of the Viet Cong to resume aggressive conventional attacks. They see little prospect for the diversion of a significant fraction of U.S./FWMAF which are presently engaged in the counterforce war to more direct counterguerrilla operations. It was pointed out that as a matter of fact over the last several months the battalion-size operations have increased over previous levels. This reflects a change in VC tactics. They appear to attack only when they think that they have numerical superiority. There is no longer an engagement of VC units equivalent to the size of our own units. The VC tactic is more likely to be the concentration of a battalion of several small companies against a platoon or company of our own, attempting quick annihilation.

In general, it was felt that we can adequately cope with this tactic, and that not only is the war going well but the way to pursue it is to "try harder."

Should more U.S./FWMAF resources become available, we feel that their deployment in support of RD in the form of combined units such as the Combined Action Company (CAC) or in the manner of Operation FAIRFAX is deserving of consideration. The use of undiluted FWMAF in support of RD is not recommended.

We note the present optimism with respect to the counterforce confrontation on one hand and on the other hand the indications that there will be requirements for additional conventional forces. A growing recognition of the magnitude of the troop requirement for the military support of RD is undoubtedly the reason for this apparent inconsistency. This lends support to our view that nonmilitary means for the provision of security must be found (e.g., accommodation), or at least a more economical technique of employing the military.

We were told by one of the most experienced OCO representatives that the most counterproductive activities of the U.S. combat elements were: the use of herbicides,

inconsiderate driving practices (sic!), harassing and interdiction fire, and failures to show proper respect for the aged. As our forces succeed in liquidating targets which can be properly addressed by our counterforce elements, we feel it is very important that military measures which exact a high noncombatant toll physically as well as psychologically must only be pursued when dictated by political considerations.

THE COUNTERGUERRILLA ENGAGEMENT

Counterguerrilla operations have been singled out as being one of the three major engagements which make up the sum total of the confrontation; counterforce and Revolutionary Development being the other two. We note significant interfaces between all three elements. Of particular importance, however, to the crucial political contest is the interrelationship between the counterguerrilla and the RD/pacification effort.

There are two species of guerrilla: the part-time-farmer/part-time-guerrilla, and the full-time guerrilla. The farmer, the local guerrilla, lives in a hamlet if conditions permit and is commonly lumped together with the "infrastructure." The functions of the local guerrillas consist mainly of harassment of the enemy: pin prick activity and more importantly the protection of the local NLF administration and its law enforcement arm. These units rarely operate in more than platoon strength.

The regional guerrillas are more likely to be full-time professionals that eventually graduate to become members of the VC Main Force units. The regional guerrillas are much more combat effective, are likely to be organized in company-size units, and are usually under the operational control of the district or province. (The designations used by the NLF are different but mean roughly the same.) Whenever we use the generic term guerrilla we always refer to the regional units.

The mission of the guerrilla is twofold: They serve as the eyes and ears of the PAVN and VC Main Forces, and support the NLF's political organization. There is clear consensus among our contacts that inadequate headway has been made to date to reduce guerrilla effectiveness. Our Free World Military Assistance Forces have of necessity been closely coupled to counterforce operations. In assigned Tactical

Areas of Responsibility (TAOR) our patrols and ambushes are effective in keeping guerrillas off balance and in causing attrition. The frequent redeployment of FWMAF which is necessary to maintain pressure on the enemy's counterforce elements sometimes results in a revival of guerrilla activity in a previously secured area. The guerrilla is able to flow back into these areas. His detailed knowledge of the local terrain and his eyes and ears in the hamlets cause him to be an even more elusive target, especially to nonindigenous forces. Those ARVN elements who are not employed in support of RD face a somewhat similar situation.

The guerrilla is the primary objective of the ARVN maneuver battalions' assigned missions in support of Revolutionary Development. These units will represent approximately 50 percent of the number available.* There are great hopes for success here and already some indications of progress have been observed in Bac Lieu province. We feel that every effort should be made to obtain the support of additional ARVN battalions as other contingencies permit, since these units offer significant possibilities, albeit unproven, as counterguerrilla fighters.

At low levels, the RF/PF forces in each province represent elements which can be controlled by the province and district chiefs in direct response to the guerrilla threat. However, these forces are somewhat uneven in quality and possibly inadequate in number. MACV has recently studied the balance of forces between ARVN and the RF/PF, presumably arriving at the best solution in view of all factors involved. The use of CAC by the Marine Corps, which has been discussed elsewhere, has been instrumental in greatly increasing PF effectiveness in I Corps. These elements, having limited mobility and flexibility, operate as close-in security of inhabited localities.

Other forces such as hamlet militia, police, and the RD teams' security element can protect against guerrilla penetration and maintain interior security. These forces, however, must be included in the overall area counterguerrilla plan. A

---

*This statement represents information available in April 1967.

requirement for centralized direction at low levels has been noted as a method for achieving the best coordination and employment of all armed personnel available.

We have observed that to maximize effectiveness control at province level is necessary. Here reference is made to the regular military units who support Revolutionary Development by directly engaging the guerrilla. At the province level, current intelligence can result in rapid response through the instrumentality of existing operation centers.

Adequate plans apparently exist which provide for training and periodic recycling of RF/PF elements through available training centers. Upon occasion, local contingencies have been seen to interfere with scheduled training, which is essential to achieving and maintaining adequate quality. Province-level control of the battalion in support of Revolutionary Development should occur as early as the situation will permit. The technique of combining ARVN companies with FWMAF was used in Operation FAIRFAX in Gia Dinh. It appeared to be an extension of the CAC system which may warrant more extensive employment when and if troop units can be diverted from the counterforce engagement. The effectiveness inherent in the integration of RD support elements was further enhanced by the use of an Area Security Coordination Center (ASCC). It ensures an essential operational focus at the province level for those agencies whose efforts should be closely coordinated, such as: intelligence, police forces, RF/PF, ARVN, and U.S./FWMAF.

We have noted trends toward more emphasis in small unit actions, particularly in the use of the guerrilla's own tactics, e.g., 101st Airborne Brigade, which if successful should greatly improve the counterguerrilla capabilities of our conventional forces. The research and development effort can undoubtedly be more closely coupled to this problem. It is one in which the fields of technique and equipment deserve close attention.

CONCLUSIONS AND RECOMMENDATIONS

The basic question addressed in this report is whether the pacification program as it is currently being applied is effective or can be effective in the near future. This report concludes that the program is not effective and will not be effective without significant changes in philosophy, training, and implementation.

In the following pages, specific recommendations are made regarding means to effect improvements in the pacification program. Conclusions and recommendations regarding the general situation, the military aspects, and the nonmilitary aspects of pacification are presented in that order.

GENERAL

Pacification is a problem of such vast dimension that from the very outset the investigation had to be limited in scope. Revolutionary Development is the key nonmilitary program. Also contributing to pacification are the manifold endeavors aimed at improving livestock, mechanization of some farming chores, electrification, sewage disposal, and many more. The common characteristic of all these efforts, except RD, is their emphasis on material benefits.

The socio-political setting of RD dictated that we reach rather far afield for an assessment of its efficacy. We felt called upon to touch on U.S. policy with respect to the underdeveloped nations in general, explore to some extent the strategic confrontation and military tactics, and go into some detail in our discussion of the historical determinants of the confrontation.

We conclude:

(1) The superiority of FWMAF in the counterforce engagement has been established.

(2) The antiguerrilla war is nowhere near completion.

(3) RD lacks political content.

(4) Pacification must remain a GVN responsibility.

Unless (2) and (3) are pursued with the same vigor as (1), the end is not in sight. Failure to observe (4) can result in Vietnam becoming a colony in fact if not in name.

MILITARY ASPECTS

Antiguerrilla Campaign

A. The antilocal guerrilla campaign is not adequate. Local guerrillas with adequate popular support cannot be eliminated by military forces only. The road to success is to make the guerrilla obsolete. The deprivation of the popular support and eventual obsolescence is the function of RD. Sweep and destroy operations attempt to eliminate the guerrillas by force. The neutralization of both local and regional guerrillas requires the coordinated operation of all security forces (military., police) to establish both internal and external security. Techniques vary in each case.

RECOMMEND: Emphasize reliable internal security so that the guerrilla can do no harm and pacification can proceed. In the strictly local context, protect the target rather than chase the aggressor.

B. The antiregional guerrilla campaign is not adequate. The viability of the JAC/CAC concept has been proven. The effectiveness of combining an ARVN company and a U.S. battalion under U.S. control was demonstrated in Operation FAIRFAX.

RECOMMEND: Examine the extension of this mode of operation by any practical reallocation or extension of resources.

C. RF/PF are inadequate.

RECOMMEND: RF/PF units be trained and equipped so that they can fulfill their mission and permit reduction of RD organic security element.

D. ARVN support of RD shows promise.

RECOMMEND: Persistence in improving troop conduct must be kept up.

E. COUNTY FAIR operations do not seem to be effective as counter-[local] guerrilla actions.

RECOMMEND: Counter-[local] guerrilla operations should be left to RF/PF where possible.

F. The key to effective counterguerrilla operations is close coordination between military and civilian elements.

RECOMMEND: Explore the feasibility of the universal use of the Area Security Coordination Center concept which provides for an effective pooling of intelligence sources and military resources.

Intelligence

MICV performs the critical function of providing the intelligence community with data on the political organization of the NLF.

RECOMMEND: MICV should be provided with an appropriate staff of political scientists and linguistic experts.

Advisors

Advisory personnel need better preparation in view of their broad and not exclusively military role.

RECOMMEND: (1) All key personnel should go through the equivalent of the Military Assistance Institute course. (2) The instructors should be given the right and be encouraged to weed out all candidates which lack the requisite inclinations and understanding as well as ability for this difficult assignment.

NONMILITARY ASPECTS

OCO

OCO-MACV coordination appears effective.

RECOMMEND: Broadest coordination of planning with respect to military and logistic support of RD.

Revolutionary Development

A. The need for grass roots political organizations exists.

RECOMMEND: Explore the possibilities of functional organizations, such as farmers' cooperatives, as a basis for organized political activity. RD teams should be trained to help in this endeavor.

B. Military security for all hamlets in South Vietnam requires a prohibitively large commitment of resources.

RECOMMEND: Use accommodation with the local power structure wherever feasible.

C. RD must be a widely exposed activity. Intelligence gathering is basically a covert operation.

RECOMMEND: Ways be explored to eventually relieve the CIA of its responsibility for the training, supervision, and support of the RD teams.

D. All aspects of RD are compromised when intelligence gathering is overemphasized.

RECOMMEND: Deemphasize the use of the grievance and aspiration team for intelligence-gathering purposes.

E. The elimination of the infrastructure is lagging for want of a proper concept for its achievement.

RECOMMEND: Concentrate on the identification and neutralization of the NLF/PRP cadre by the police rather than by military CORDON SEARCH operations.

F. The organic security element comprises a disproportionate part of the team.

RECOMMEND: A reduction compatible with the intrinsic security needs of the team and the ability of the RF/PF units to perform this function.

G. Area security is a prerequisite to the successful accomplishment of pacification through Revolutionary Development. Current techniques require too many security troops to be practical.

RECOMMEND: Exploration of the increased use of modern technology to lower the manpower requirements for area/hamlet security.

H. Progress in pacification comes slowly. Indicators which rely on short-term changes tend to be misleading.

RECOMMEND: (1) Establish a reasonable timetable for progress measured in years not months. (2) Identify landmarks which are indicative of permanent achievemnts.

I. It is in the nature of underdeveloped nations that their capability to carry out programs is limited.

RECOMMEND: The number of programs urged on the GVN be carefully matched to their ability to implement.

J. Extemporaneously organized RD teams have been used in areas where large military forces established conditional security. Their apparent success leads to an underestimate of training requirements.

RECOMMEND: The tasks of ad hoc teams should be matched to their capabilities so that disappointments can be avoided once the military leave the area.

K. The large and evident population drift toward the cities is potentially extremely dangerous as a source of further aggravated discontent.

RECOMMEND: That RD authorities be encouraged to devote substantial effort to accommodating the growing urban migration.

APPENDIX A

PARTIAL RECORD OF INTERVIEWS, BRIEFINGS, DISCUSSIONS, AND FIELD VISITS

PROJECT PACKARD

September 1966 - April 1967

APPENDIX A

PARTIAL RECORD OF INTERVIEWS, BRIEFINGS, DISCUSSIONS, AND FIELD VISITS

PROJECT PACKARD

September 1966 - April 1967

Col. Robert M. Montague, The White House, 29 Sep 1966

Col. Raymond G. Jones, 11 Oct 1966

Gen. Maxwell D. Taylor, IDA, 12 Oct 1966

Col. John Arthur, AID, 30 Sep 1966

Messrs. Theodore Liu, J. Ford, Frank Scotten, USIA, 10 Oct 1966

Col. D. P. Wyckoff, Civic Action Branch, G-3, Hq USMC, 13 Oct 1966

Human Sciences Research, 13 Oct 1966

M/Gen. Peers, Col. Geiger, Col. McRae, JCS/SACSA, 17 Oct 1966

Messrs. Charles Sloan, Ralph Wood, Office of Public Safety, AID, 18 Oct 1966

Col. Pehrson, Lt. Cols. Kotite and Peterson, Army Civil Affairs Directorate, 18 Oct 1966

Dr. George H. Tanham, RAND Corp., 24 Oct 1966

Lt. Col. David Hughes, U.S. Army War College, 24 Oct 1966

Mr. Leonard Sullivan, ODDR&E, 25 Oct 1966

Dr. Jean Mintz, Center for Naval Analysis, 31 Oct 1966

*Mr. Robert Shepherd, OSD/ISA, Pentagon, Oct 1966

Ambassador William Leonhart, Executive Office, The White House, 2 Nov 1966

Mr. William Colby, CIA, 3 Nov 1966

Mr. Walter G. Stoneman, AID, 7 Nov 1966

---

*Memorandum not on file with Project PACKARD, IDA, Arlington, Virginia.

Lt. Col. Volney Warner, Col. Pehrson, DCSOPS, Department of the Army, 8 Nov 1966

Drs. A. Hoehn, A. Kraemer, Human Resources Research Office (HumRRO), 16 Nov 1966

Mr. Rutherford Poats, Far East Bureau, AID, 17 Nov 1966

Dr. Paul Spector, American Institute for Research, 18 Nov 1966

Lt. Col. Katz, Army Psywar Opn. Directorate, Dec 1966

*Col. J. V. Patterson, ARPA, Saigon, 5 Dec 1966

Mr. Milton Fredman, USIA, 5 Dec 1966

Mr. Pret Abbott, Center for Research in Social Systems (CRESS), 5 Dec 1966

Mr. Kenneth Karcher, Social Science Research Division, Army Research Office, 5 Dec 1966

Mr. Richard Holbrooke, The White House, 6 Dec 1966

*M/Gen. J. C. F. Tillson, J-3, MACV, 6 Dec 1966

Drs. William Helme, Louis T. Willemin, Leo P. Kotula, Frank Medland, Army Personnel Research Office, 7 Dec 1966

Mr. Luigi Petrullo, Dr. Bert King, Group Psychology Branch, Office of Naval Research, Dec 1966

Mr. John Ackerman, U.S. Army Limited War Laboratory, 8 Dec 1966

*Dr. Wm. MacMillan, Office Science Advisor, Hq. MACV, 13 Dec 1966

Prof. Ithiel Pool, MIT, 14 Dec 1966

*M/Gen. J. C. F. Tillson, J-3, MACV, 14 Dec 1966

Drs. Condit, Hauck, Windle, Hanna, CRESS, 15 Dec 1966

*Mr. Roy Linsenmeyer, Office Science Advisor, CINCPAC, Honolulu, 15 Dec 1966

*Col. Brooks, J-34, MACV, Dec 1966

*B/Gen. J. Knowleton, J-33, MACV, Dec 1966

*Col. J. Powell, J-33, MACV, Dec 1966

*Dep. Amb. Wm. Porter, U.S. Embassy, Saigon, Dec 1966

*M/Gen. E. Lansdale (ret.), U.S. Embassy, Saigon, Dec 1966

*Mr. Culbertson, U.S. AID, Saigon, Dec 1966

---

*Memorandum not on file with Project PACKARD, IDA, Arlington, Virginia.

*Mr. John Monopoli, Public Safety, U.S. AID, Saigon, Dec 1966

*Mr. David James, USIA, Saigon, Dec 1966

*Col. George Jacobson, U.S. Embassy, Saigon, Dec 1966

*Dr. Gerald Hickey, Saigon, Dec 1966

*Dr. Leon Goure', Saigon, Dec 1966

*Mr. J. Murphy, RD Training Center, Vung Tau, Dec 1966

*Capt. J. Sauvageot, RD Training Center, Vung Tau, Dec 1966

*Mr. R. Kriegel, RD Training Center, Vung Tau, Dec 1966

*Mr. Bruce Kressler, Regional Rep., Vinh Binh Province, Dec 1966

*Lt. Col. Russell, Sector Advisor, Long An Province, Dec 1966

*Maj. Wirth, Sector Advisor, Go Cong Province, Dec 1966

*B/Gen. Ellwood, Chief of Staff, III MAF, Dec 1966

*Col. Holmgren, G-5, III MAF, Dec 1966

*Lt. Col. Green, Collection Branch, G-2, III MAF, Dec 1966

*Maj. R. A. McGonigal, Chaplain, III MAF, Dec 1966

*Lt. Col. Stevens, USA, 29th Civic Affairs Company, Da Nang, Dec 1966

*Lt. Col. Shrader, COUNTY FAIR Operations, III MAF, Dec 1966

*Lt. Col. Becker, Dep. Asst. Advisor, I Corps Tactical Zone, Dec 1966

*Col. M. G. Hatch, ACTIV, Dec 1966

*Col. Woods, ACTIV, Dec 1966

*Col. Lutz, ACTIV, Dec 1966

*B/Gen. D. McGovern, J-1, MACV, Dec 1966

Messrs. George Carver, George Allen, CIA, 18 Jan 1967

Messrs. Roy Moffet, Paul Watson, CIA, 19 Jan 1967

Mr. Robert Komer, Ambassador Leonard, The White House, 24 Jan 1967

Dr. George Tanham, RAND Corp., 24 Jan 1967

Mr. Richard Steadman, I&L, 26 Jan 1967

Messrs. Theodore Liu, James Richardson, USIA, 31 Jan 1967

*Dr. John Foster, OSD, DDR&E, Jan 1967

---

*Memorandum not on file with Project PACKARD, IDA, Arlington, Virginia.

*Mr. H. F. Matthews, State Department, Jan 1967

*Dr. T. P. Cheatham, ODDR&E, OSD, Jan 1967

*Mr. John Maddux, OSD, Jan 1967

*Col. George Cutler, DIA, Jan 1967

*Maj. Williams, DIA, Jan 1967

*Lt. Col. Pustay, USAF, The White House, Feb 1967

Gen. Maxwell D. Taylor, IDA, 2 Feb 1967

Mr. George Allen, CIA, 14 Feb 1967

M/Gen. Paul Smith, Dep. Chief, OCO, Saigon, 25 Feb 1967

M/Gen. McChristian, J-2, MACV, 25 Feb 1967

Col. Peale, Lt. Cols. Watson, Lively, Patterson, Psyops Directorate, MACV, 25 Feb 1967

Col. Boudinot, Revolutionary Development Staff, Field Force Victor II, Long Binh, 26 Feb 1967

Col. Brigham, Revolutionary Development Support Directorate, 27 Feb 1967

Mr. Leonard Maynard, OCO, 27 Feb 1967

Lt. Col. M. Gilligan, G-5 Advisor, IV Corps Tactical Zone, Mr. Wm. King, New Life Development Advisor, OCO, Can Tho, 28 Feb 1967

Col. Wm. Maddox, Mr. Hayes, 21st ARVN Division, Bac Lieu, 28 Feb 1967

Cols. A. O. Meyers, Hodge, Special Activities Section, Revolutionary Development Support Directorate, 29 Feb 1967

Mr. Clay McManaway, Plans and Evaluations Section, OCO, 29 Feb 1967

Intelligence (including events to March 1967 during which time the entire intelligence community at MACV, Saigon, was visited)

Mr. John Vann, OCO Regional Director, Bien Hoi, 2 Mar 1967

Lt. Col. Kynard, Special Activities, Revolutionary Development Support Directorate, 3 Mar 1967

199th Light Infantry Brigade, Cat Lai, 4 Mar 1967

Lt. Col. Rise, Majs. Roche, Vesser, Spaulding, Revolutionary Development Support Directorate, 4 Mar 1967

B/Gen. J. Knowleton, Director, Revolutionary Development Support, 5 Mar 1967

---

*Memorandum not on file with Project PACKARD, IDA, Arlington, Virginia.

Delta visit, 6 Mar 1967

Combined Intelligence Center of Vietnam (CICV), second visit, 7 Mar 1967

Dep. Ambassador Wm. Porter, 7 Mar 1967

Lt. Col. Anderson, MACV, PF/RF, 8 Mar 1967

Mr. N. Lapham, OCO, New Life Development, 8 Mar 1967

Mr. W. Lathram, Deputy Director, OCO, 8 Mar 1967

Mr. Ogden Williams, Chieu Hoi, 8 Mar 1967

Nha Trang and Kanh Hoa Provinces, 9 Mar 1967

Maj. Be, Capt. Sauvegeot, Mr. Ellis, National Revolutionary Development Training Center, Vung Tau, 11 Mar 1967

Messrs. Thomas Lowlor, Quint Watkins, Census Grievance Organization, 12 Mar 1967

Mr. Brewer, New Life Development, OCO, 12 Mar 1967

Mr. Eric Hughes, Refugee Section, OCO, 13 Mar 1967

M/Gen. Lam, Commanding General, I Corps Tactical Zone, 14 Mar 1967

Col. Serong (detached from Australian Army, member of Dep. Amb. Porter's inspection group for RD), 13 Mar 1967

Binh Dinh Province, 14 Mar 1967

Combined Military Interrogation Center (return visit), 15 Mar 1967

Phan Rang, Cam Ranh Bay, Tuy Hoa, Ban Me Thuot, Tay Ninh, Saigon, Mar 1967

Vung Tau, Nui Dat, 1st Australian Task Force, 16 Mar 1967

Mr. W. Lathram, Deputy Chief, OCO, 18 Mar 1967

Dr. Wm. MacMillan, 18 Mar 1967

Mr. J. Monopoli, Chief, Public Safety Division, OCO, 18 Mar 1967

Dr. R. Holbrook, Director, OSD/ARPA R&D Field Unit, M/Gen. R. Stillwell, COMUS MACTHAI, Bangkok

*Mr. Roy Linsenmeyer, Office Science Advisor, CINCPAC, Honolulu, 23 Mar 1967

Notes on NLF Platform

Lt. Col. Robert Montague, The White House, 30 Mar 1967

*Dr. Martin Bailey, OSD/SA, The Pentagon, 1 Apr 1967

---

*Memorandum not on file with Project PACKARD, IDA, Arlington, Virginia.

Mr. Chester Cooper, State Department, 7 Apr 1967

Prof. Milton Sacks, Brandeis University, 13 Apr 1967

*B/Gen. R. Reynolds (ret.), Col. Bryce Denno (ret.), Military Assistance Institute, 24 Apr 1967

Prof. E. O. Reischauer, ex-Ambassador to Japan, Harvard University, 26 Apr 1967

Dr. H. Wallace Sinaiko, IDA, was a major contributor to the PACKARD study from September 1966 to December 1966.

---

*Memorandum not on file with Project PACKARD, IDA, Arlington, Virginia.

APPENDIX B

RELATIONS OF INTERDEPENDENCE, RESTRAINT, AND ALTRUISM

APPENDIX B

RELATION OF INTERDEPENDENCE, RESTRAINT, AND ALTRUISM*

The relation of interdependence, restraint, and altruism can be expressed (metaphorically) as

$$R = (g)\ \frac{I}{A}$$

which states that the degree of restraint R practiced in a society is some function (g); directly related to the degree of interdependence I and inversely related to the degree of altruism A of the members of the society. The function (g) is the function of government and this function also has degrees of effectiveness.

Restraint is made up of the use of force (kinetic) or the threat of force (potential). In a highly developed society most of the restraints are defined by law although some are transmitted by customs and mores.

Interdependence is simply how much individuals or groups are dependent on each other, particularly for items of survival. Interdependence almost always increases with the development of technology in a society (although technology also has the potential of reducing interdependence in some cases). Any nation which has gone through its industrial revolution usually ends up in a highly interdependent condition. Conversely, societies which are predominantly agricultural are less interdependent unless the agriculture has been "collectivized," or at least operated in some cooperative manner.

Altruism is a somewhat more elusive term. As defined in Webster's dictionary it is the "unselfish concern for the welfare of others." In a more passive state it

*This section was contributed by Dr. Thomas G. Belden, IDA.

becomes accommodation or the acceptance of a state of conformity. Altruism is related to education, individual morality, certain types of philosophical or religious views, and other factors which make up that loose term, "human nature."

Whether or not one accepts $R = (g)\frac{I}{A}$ as a principle, it is at least a convenient device to sort out much of political and social philosophy or theory. For example, contrast Hobbs and Rousseau. Hobbs maintained

$$R\uparrow = (g)\frac{I}{A\downarrow}$$

That is, men were basically beasts whose low natural state of altruism ($A\downarrow$) demanded powerful restraint ($R\uparrow$) to keep them from each other's throat. Hobbs had almost nothing to say about interdependence probably because the industrial revolution had not yet occurred in his time.

Rousseau, on the other hand, said

$$R\downarrow = (g)\frac{I\downarrow}{A\uparrow}$$

or that man, in an ideal state of nature, was very independent (the reciprocal of interdependence) or $I\downarrow$. Also man, in this natural state was the "noble savage" whose altruism was high ($A\uparrow$) and thus there was no need for restraint ($R\downarrow$) and thus no need for government (g); Rousseau, of course, was conscious of the industrial revolution and its attendant social effects. Thomas Jefferson is in the tradition of Rousseau, but laid particular emphasis on the interdependence issue. Although not as extreme as Rousseau, he visualized the United States as made up of small, independent farmers. The highly interdependent cities were seen by him as "running sores on the body politic."

John C. Calhoon, in his political philosophy, foretold the Civil War simply because the source of restraint was not constitutionally sufficient to overcome the increasing interdependence between North and South (primarily due to the railroads) and the concurrent decrease of altruism between the sections over the issue of slavery. In this case he predicted the total breakdown of the government process.

Many other social and political philosophies and theories can be examined with this paradigm but let us leave that for the examination of current problems.

Of the more than one hundred nations in the world today, each one has a different balance in the expression $R = (g) \frac{I}{A}$. For example, is the same governing mechanism (g) suitable for a nation where I is low as for one where I is high? How is it possible to raise A? What does too much R do to A?

These abstract questions are closely related to more concrete issues such as pacification, land reform, political stability, food production and distribution, etc. It might be possible that all government mechanisms (g) at any given time should be in the image and likeness of ours or anyone else's government, or that the specific state of interdependence and altruism might require something unique in the form of government.

APPENDIX C

IRD HISTORICAL PERSPECTIVE

APPENDIX C

RD HISTORICAL PERSPECTIVE

The present Revolutionary Development program should be studied within the context of its precursors. The paper prepared for ARPA by William A. Nighswonger entitled "Rural Pacification in Viet Nam 1962-1965" is an excellent resume. Here one reads how the French had tried under Navarre and DeLattre to develop controlled areas protected by Vietnamese troops so that French forces could be more mobile. The French had created, and moved into villages in their own rear area, Vietnamese cadres called Group Administrative Mobile (GAMO), who served under the military government forces called suppletives. American aid was then provided through the French under the Special, Technical, and Economic Mission (STEM). Even at this early date, a military-civil problem developed because the head of STEM was helping the people to improve their lot but DeLattre considered that it contributed to troublesome anti-French nationalism.

After the Geneva accords, President Diem's armed forces moved into former Viet Minh areas with a pacification program referred to as civic action. General Lansdale worked out much of the program. Cadres learned the three "withs"--eat, sleep, and work with the people. Diem had refused to use the GAMO cadres developed by the French because he thought they had not been effective during the 1952-54 period. The black-clad civic action cadres of President Diem undertook an enormous variety of political, social, and economic programs intended to stimulate self-help and to implant a sense of solidarity between the peasant and the new government. Examples of activities are: census and surveys of physical needs; building of schools, maternity hospitals, information halls, and roads; digging wells and canals; teaching personnel about public hygiene, medicines, and innoculations;

teaching children in schools; forming village militia, conducting political meetings, explaining agrarian reforms.

Political activities included some communist-denunciation campaigns, where public exhibitions had a sometimes brutal effect on those marked as sympathizers because their kin had gone north to the communist regime. These mistreated individuals became a significant source of support of the Viet Cong in later years. Also, the government tried to transfer regular civil servants from other agencies in order to enlarge the operation. This was met with mass resignations of the transferees and an eventual abandonment of the effort. The death in 1957 of civic action's first dynamic director permitted the Nhu family to move the organization into their expanding political and intelligence system. Activity in the field became more propagandistic and political with less emphasis on economic and social services to the people. Diem's government was engaged at the same time in refugee resettlement, land development and reform, and the creation of agrovilles. None of these programs had a really significant effect on the acceptance of his regime.

Diem started without control of elites or grass roots political elements. His brother-in-law, Nhu, led the development of a political base for the regime in a manner that reflects the methods of communist mass organization whose goal is total immersion of the individual in its social structure by control of all social units. American advisors urged from the first that Diem encourage various noncommunist nationalist elements to express themselves politically, but the Ngo brothers suppressed and imprisoned their opposition instead of encouraging them. In 1956, the regime took a giant step away from rapport with the countryside by changing elective village offices to positions appointed from Saigon, only months after some areas had enjoyed the first local election since the departure of the Viet Minh. This whole program was rendered useless by faulty implementation by its political sterility which was engendered by the complete absorption by the Diem machine of the political structure of the country and all its factions.

In the Hoa Hao area, some researchers found a correlation between government suppression of Hoa Hao political activity and the rate of increase of Viet Cong influence. This observation is particularly germane to the basic thesis of the importance of political activity.

After 1956, the approach of South Vietnam and the United States to the problem of defense against the communists shifted radically from reliance on civic action to the establishment of a conventional army. Some advisors belittled in public statements the rising insurgent threat and ARVN was developed as the mirror image of a U.S. force. There was a Civil Guard (Bao An) which was a direct descendant of the French Guard Civil, a province-level organization, and popular forces called the Self-Defense Corps (Dan Ve). The role of the police in early counterinsurgency programs was severely limited because of an internal controversy which had led to the military takeover of what would have been a rural constabulary. By 1960, the beginnings of a response to the insurgent threat can be discerned. The United States helped the Vietnamese Army to create 60 Vietnamese Ranger companies geared to antiguerrilla operations. The first plan for the organization of pacification teams was prepared late that year. Although not immediately implemented, it served as a basis for later strategy.

The practice of fortifying villages was a tradition in North Vietnam. As the Viet Cong rural threat developed, variations on this theme were attempted in various provinces. The province chief of Ninh Thuan organized in 1960 several villages for self-defense including armed volunteer militia and the building of fences. In July 1961, Vinh Long became the scene of the first three completed "strategic hamlets." Many were established in Quang Ngai province shortly thereafter.

Sir Robert Thompson, former Defense Minister in Malaya, arrived in September 1961 to advise Diem on the British experience. Actually, Mr. Nhu, Diem's brother-in-law, was given credit for the program since he created the conceptual framework for the plan and set its pace for completion. This program, unfortunately, became very much involved in Diem's Personalist philosophy which is

a mixture of Western democracy and dictatorship garnished with lofty and mostly fuzzy concepts which could not be successfully communicated to the peasant. The hamlet program was well under way by the fall of 1962 when American, civilian and military, personnel began operating in earnest throughout most of the provinces. As the program unfolded, significant divergences developed between Americans and Vietnamese particularly with respect to the relation of the peasant to the program and his participation.

The regime was trying to articulate a revolution in terms of what was believed to be necessary and proper for the Vietnamese people, but there was little concern about the peasant's interests and probable response to the program. An analysis prepared in the summer of 1963 by the Office of Rural Affairs of USOM two years after initiation of the strategic hamlet program by the Vietnamese, has some illuminating comments. It repudiated the view that a police state-like control of the population should be the program's primary purpose. Control within the hamlet, it said, ought to be implemented by the people themselves. Although the peasant's desires were realistically recognized, it seemed to stop somewhat short of the crucial issue which was his political motivation and his sense of belonging to or identification with his government.

By the summer of 1963, when the Buddhist crisis paralyzed much of the nation's administrative and military apparatus, the strategic hamlet program was at the height of its "phony" stage. Governmental pressure, poor administration, and lack of coordination resulted in great disparities between those strategic hamlets declared completed and those still under construction. The program became a mere facade. At the close of 1963, in the military and political chaos that followed the coup period, many provinces produced their own pacification programs. Strategic hamlets were renamed New Life hamlets and new criteria stressing rural reconstruction were established for judging a hamlet as completed. At the same time there was an enormous planning exercise involving many months of delay, red tape, and repeated political eruptions. Out of this arose the current pacification program

called Rural Construction by the Vietnamese and known in U.S. circles as Revolutionary Development.

The pacification strategy devised by the end of 1965 was based on four province areas as the foci for intensive pacification using the full resources of all agencies and armed forces.

An interesting sidelight is presented by the pacification system which was implemented by the youngest of the Ngo brothers, Ngo Dihn Can in Central Vietnam. Can's background and viewpoint were much closer to the peasant's than any of this brother's. His tightly run National Revolutionary Movement was an important factor in the control of villages, particularly those near Hue, his home. Members of the National Revolutionary Movement, a political party of sorts, were considered by Diem to be not hardnosed enough and too decadent. From this political organization, Can fashioned highly motivated, well-trained teams of peasants which moved unobtrusively into the countryside to live and work with the peasant much as the Viet Cong does. Their intent was to build in the villager the confidence that they would be around for a long time. Selection of trainees was carefully made. All had to be peasants. Many recruits were sons of parents who had suffered at the hands of the Viet Cong. This element was called the Force Populaire. They helped the peasants at their normal chores and they always paid their board. They operated in company-size, fanning out in a village of perhaps 4000 people. Training was arduous and focused on the development of esprit. Political activity was the major emphasis. Full, free discussion and self-criticism were a part of this training. The program enjoyed a good deal of early success and Diem actually ordered the expansion of it into the Delta area at the time of his demise. When the Diem regime fell in 1963, Can was imprisoned and eventually executed, his political organization vanished, and the Force Populaire disappeared as quickly and as quietly as it began.

During its brief life the Force Populaire stands as one of the best conceived and implemented programs attempted in Vietnam. It is a good example of what can be accomplished by emphasizing the qualitative rather than quantitative aspects of

cadres; in fact a proper correlation between the strategic hamlet concept and the Force Populaire might have achieved a highly successful result.

Some of the Force Populaire methods are discernible in the Political Action Teams (PAT) that were a part of the 1966 pacification plan. These were the teams which have given way to the 59-man Revolutionary Development teams of the currently existing Revolutionary Development program.

The methodology of the Ngo regime in pacification was almost identical in concept to that of Ho Chi Minh and Mao Tse-tung. However, when launched, the program did not have the services of an apparatus comparable to the highly skilled and motivated communist rural cadre system. In contrast with communist tactics, however, which are usually closely geared to the interests and tolerances of the peasant and the capabilities of its party cadres, the pacification policy of the Ngos reflects the isolation of the regime from its own bureaucracy.

In addition to overestimating the capacity of the political and administrative networks to administer a revolution, they underestimated the resistance of the peasant to shoulder the substantial burdens required for the "self-sufficient" hamlet construction policy.

Subsequent governments fared even worse in attempting pacification with even less political control in the face of increased communist forces. Since 1956, the American involvement has been conceptually clouded. First the threat from the North was mystifying, then the insurgent threat was underestimated, and, finally, the solution was sought in terms of an uncoordinated proliferation of government programs to aid the peasants without the essential ingredient of protection from the Viet Cong. The fundamental question of the adequacy of the incumbent government at the center was bypassed in favor of finding means of establishing its image and asserting its power in the countryside.

As a consequence, much of the U.S. involvement in pacification remained at the level of projects and programs, amounting usually to a superficial solution. It is

idle to believe that the U.S. can underwrite a social evolution of the magnitude envisaged by RD without entering into the internal policies and politics of Vietnam.

In these pages, we have summarized earlier pacification programs to provide a more complete understanding of the evolution of RD.

This resume has been largely taken from the very excellent study by W. Nighswonger.

APPENDIX D

GVN ORGANIZATION CHART FOR REVOLUTIONARY DEVELOPMENT

GVN SECURITY SERVICE

GVN ORGANIZATION CHART FOR REVOLUTIONARY DEVELOPMENT

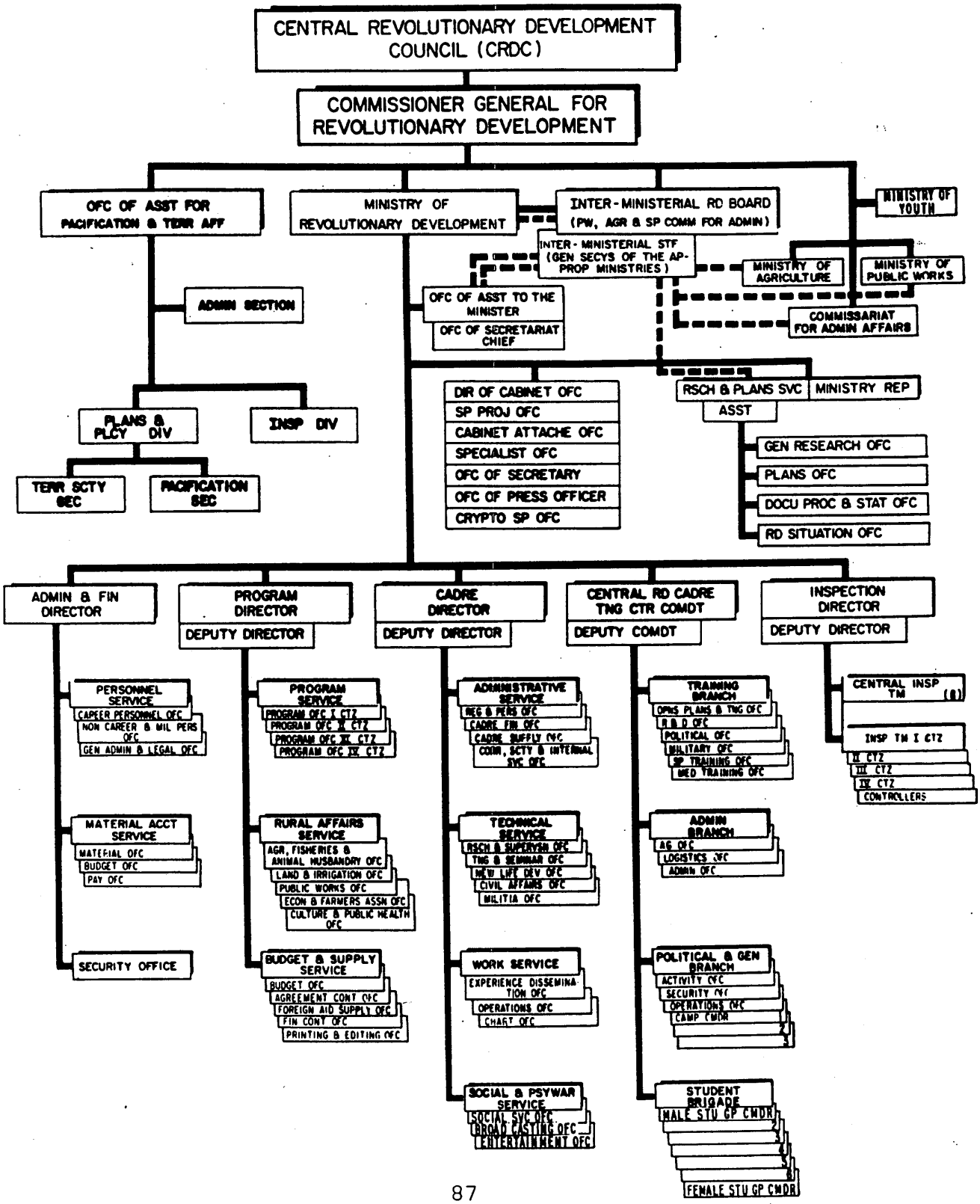

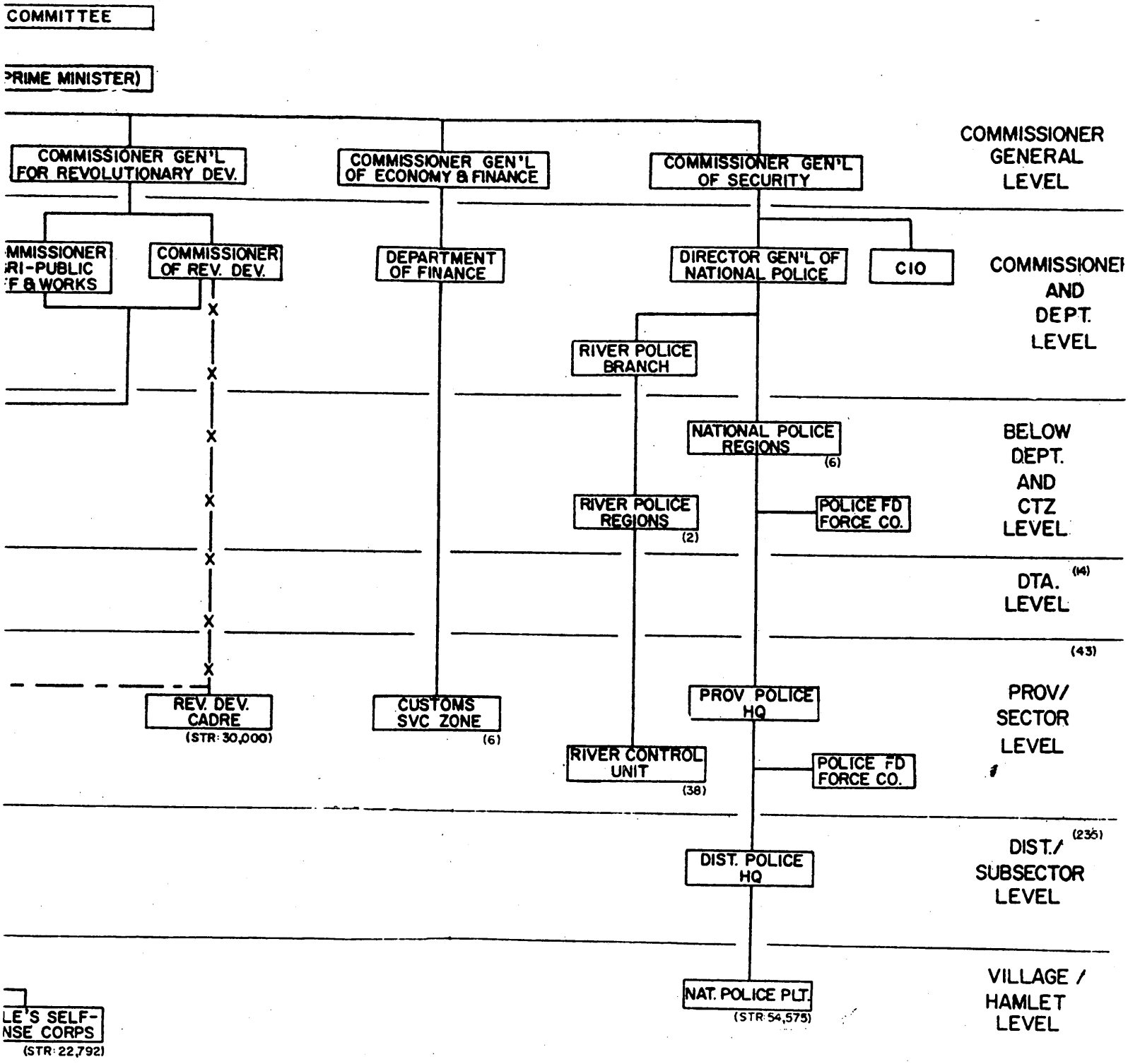
COMMITTEE
PRIME MINISTER)
COMMISSIONER GEN'L FOR REVOLUTIONARY DEV.
COMMISSIONER GEN'L OF ECONOMY & FINANCE
COMMISSIONER GEN'L OF SECURITY
COMMISSIONER GENERAL LEVEL
MMISSIONER RI-PUBLIC F & WORKS
COMMISSIONER OF REV. DEV.
DEPARTMENT OF FINANCE
DIRECTOR GEN'L OF NATIONAL POLICE
CIO
COMMISSIONER AND DEPT. LEVEL
RIVER POLICE BRANCH
NATIONAL POLICE REGIONS
(6)
BELOW DEPT. AND CTZ LEVEL
RIVER POLICE REGIONS
(2)
POLICE FD FORCE CO.
DTA. LEVEL
(14)
(43)
REV. DEV. CADRE
(STR: 30,000)
CUSTOMS SVC ZONE
(6)
PROV POLICE HQ
PROV/ SECTOR LEVEL
RIVER CONTROL UNIT
(38)
POLICE FD FORCE CO.
(236)
DIST. POLICE HQ
DIST./ SUBSECTOR LEVEL
NAT. POLICE PLT.
(STR: 54,575)
VILLAGE / HAMLET LEVEL
LE'S SELF- NSE CORPS
(STR: 22,792)

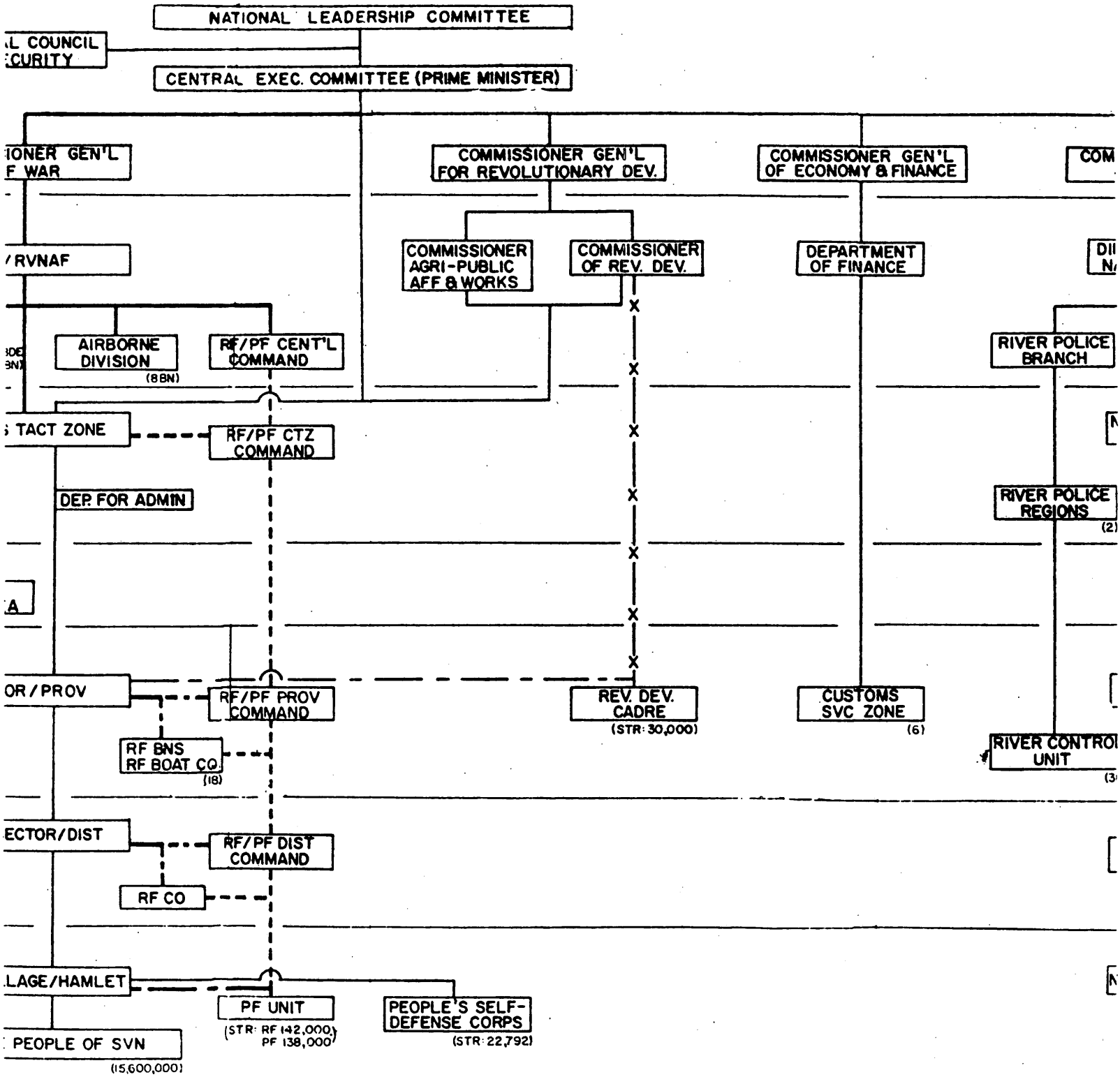

OMPONENT (ARVN)

GVN SECURITY STRUCTURE

(CURRENT AS OF 12 JULY 1966)

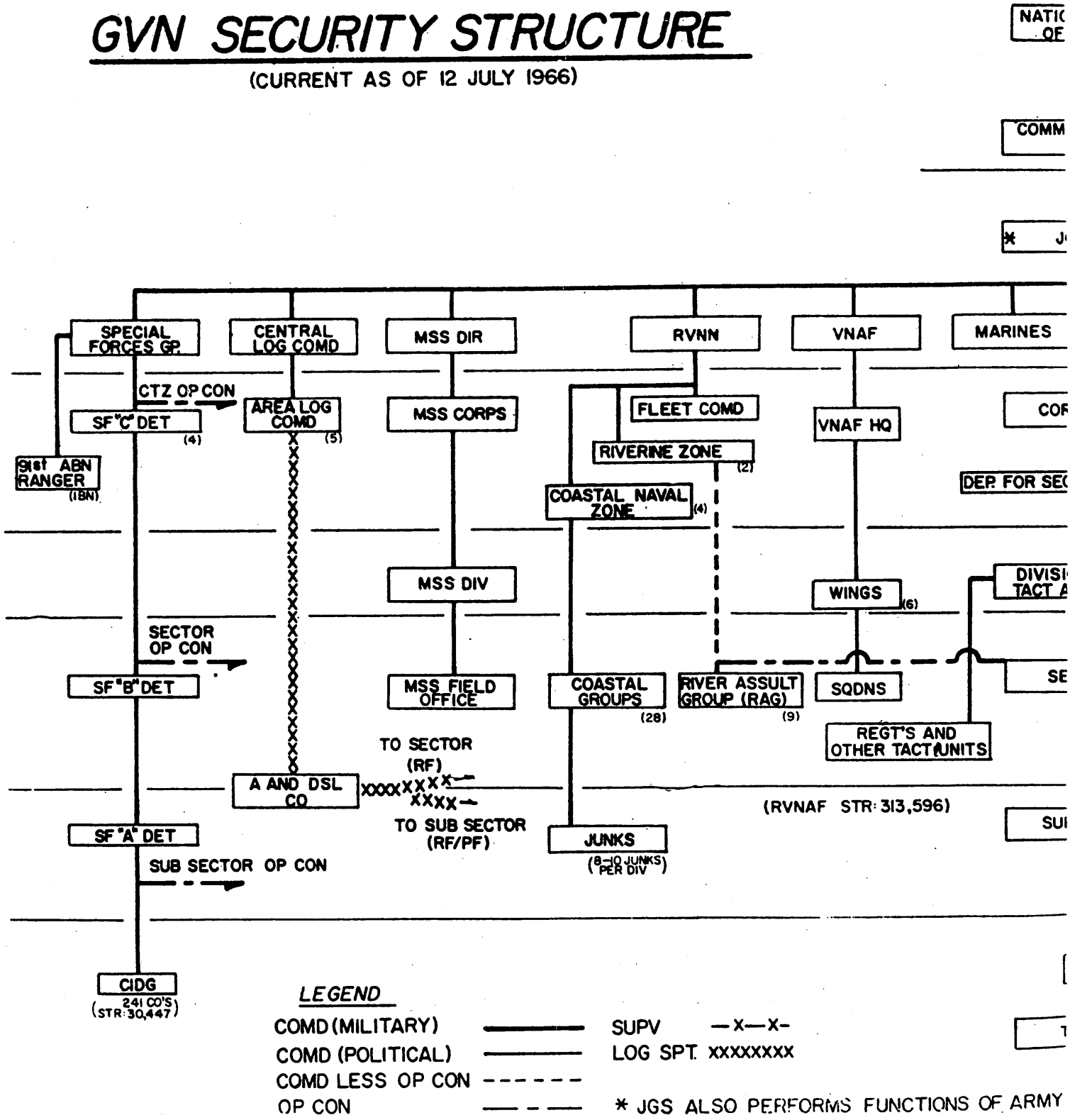

APPENDIX E

PROVINCIAL ADMINISTRATIVE ORGANIZATION

PROVINCES OF SOUTH VIETNAM

PROVINCIAL ADMINISTRATIVE ORGANIZATION

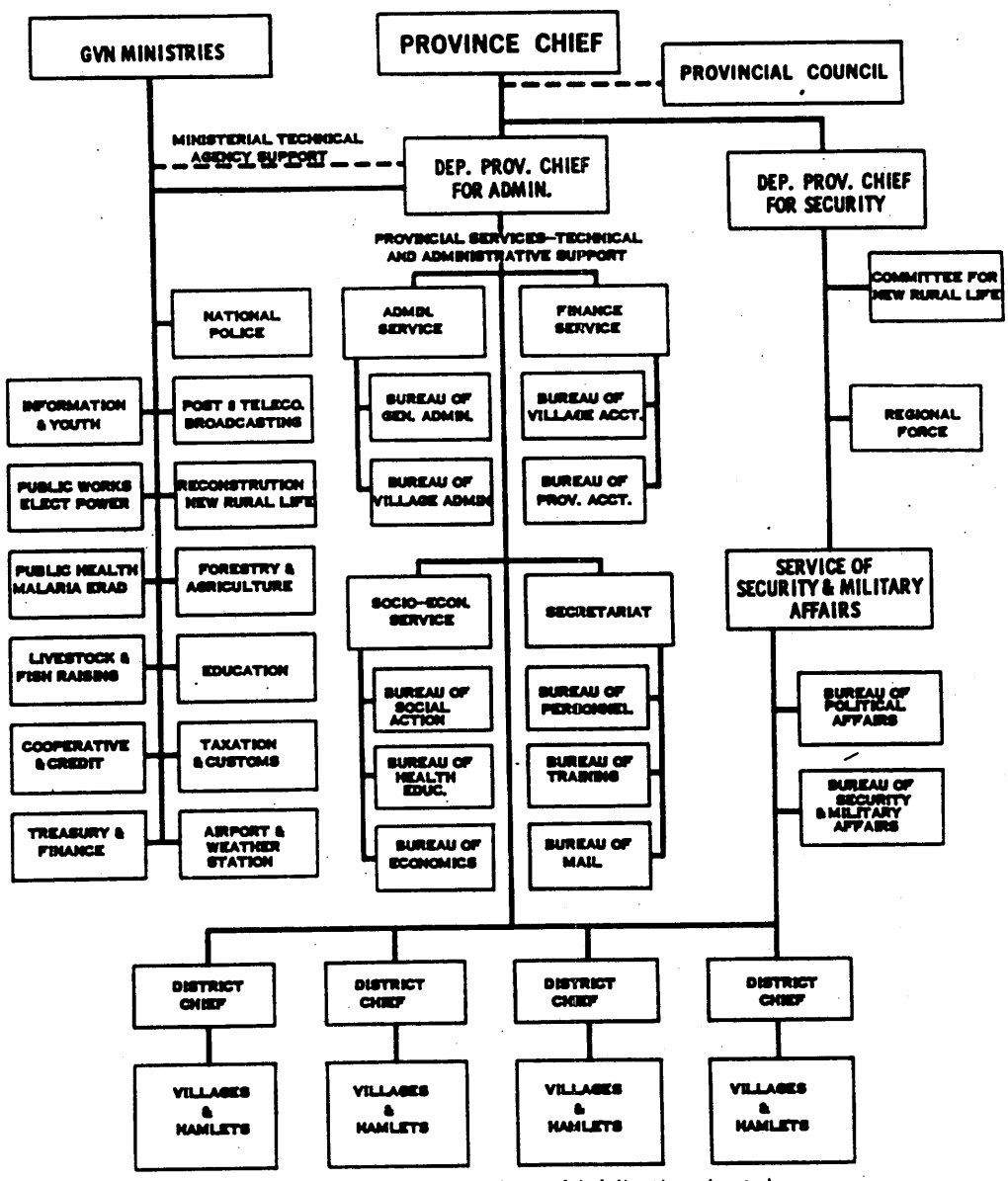

NOTE: This diagram reflects the realities of dual direction and control within the latest available schematic depiction of an idealized province. The actual structure of any particular province might differ considerably from that shown above.

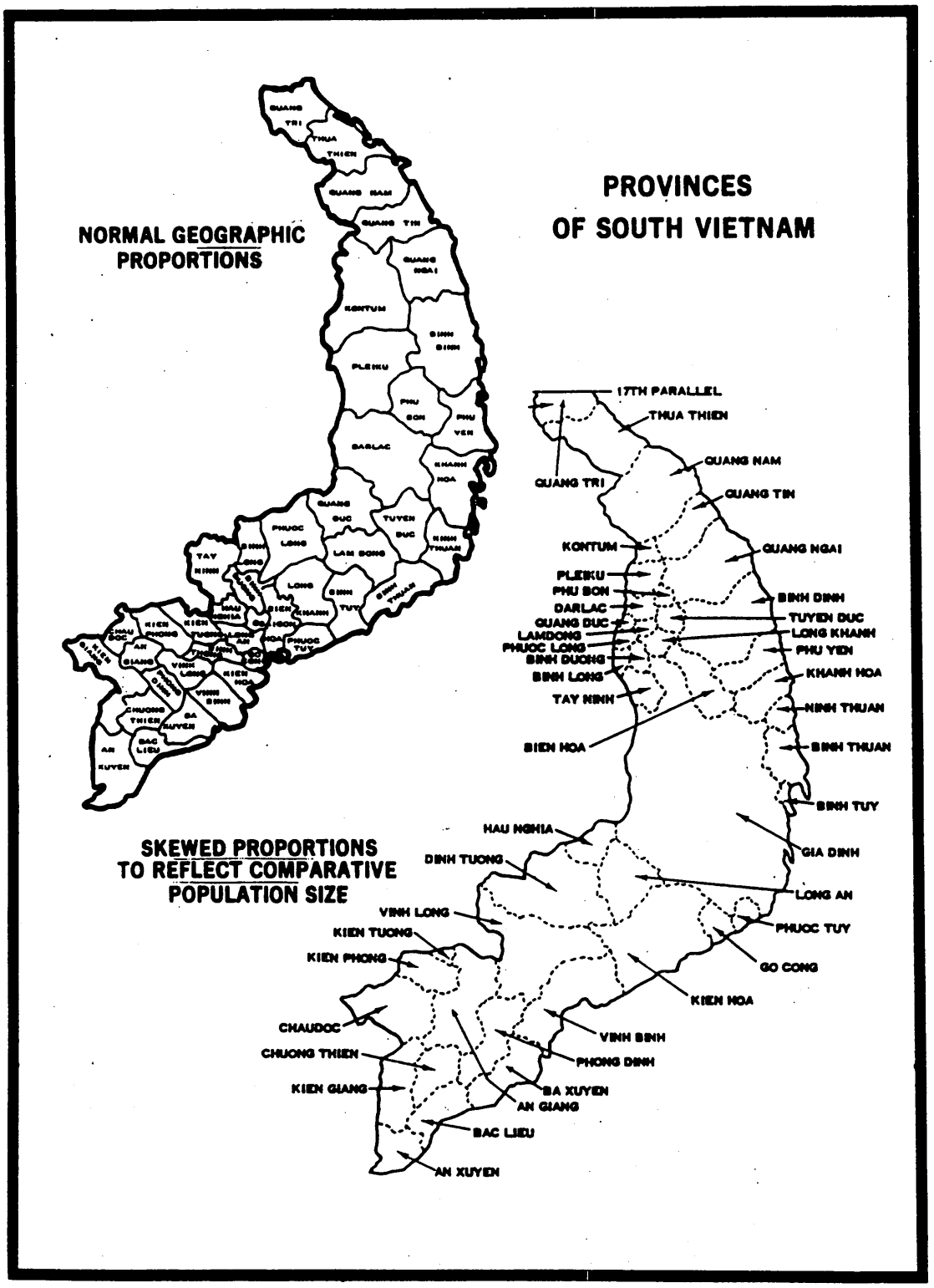
PROVINCES
OF SOUTH VIETNAM
NORMAL GEOGRAPHIC
PROPORTIONS
SKEWED PROPORTIONS
TO REFLECT COMPARATIVE
POPULATION SIZE
17TH PARALLEL
THUA THIEN
QUANG NAM
QUANG TRI
QUANG TIN
KONTUM
QUANG NGAI
PLEIKU
PHU BON
BINH DINH
DARLAC
TUYEN DUC
QUANG DUC
LONG KHANH
LAMDONG
PHUOC LONG
PHU YEN
BINH DUONG
KHANH HOA
BINH LONG
TAY NINH
NINH THUAN
BIEN HOA
BINH THUAN
BINH TUY
HAU NGHIA
GIA DINH
DINH TUONG
LONG AN
VINH LONG
PHUOC TUY
KIEN TUONG
KIEN PHONG
GO CONG
KIEN HOA
CHAUDOC
VINH BINH
CHUONG THIEN
PHONG DINH
KIEN GIANG
BA XUYEN
AN GIANG
BAC LIEU
AN XUYEN

APPENDIX F

CHARACTERISTICS OF THE MILITARY CONFRONTATION

APPENDIX F

CHARACTERISTICS OF THE MILITARY CONFRONTATION*

The armed conflict in Vietnam is the first of its kind that the U.S. has become engaged in. Its unique quality lies in the tight interplay of political action and military operations, and this has forced the U.S. to reevaluate strategic concepts based on the precepts of conventional war. Various means have been explored to counter the political thrust of the enemy, the latest being Revolutionary Development. The military have been urged to support these political activities by such means as providing security. All along, however, there has persisted the feeling, particularly among the Vietnamese military, that programs such as Revolutionary Development have no strategic value and thus constitute an unnecessary manpower drain. We intend to demonstrate that Revolutionary Development is one possible substrategy within the context of a countervalue engagement.

A great deal is made of the difference between a civil war and a war of external aggression. Historically, there has rarely been a civil war that did not involve an external power--either overtly or covertly. As a matter of fact, it is well to remember that the notion that a civil war is an internal affair and nobody's business but the "legitimate combatants" derives from the concept of self-determination which became accepted around the turn of the century.

The pragmatic South Vietnamese fail to see our help to the GVN as morally superior to the help that the North Vietnamese receive from the USSR and China. This does not imply indifference to Sino-Soviet support of their enemy, but an attitude

---

*The help of Dr. Thomas G. Belden of IDA in elucidating the concepts in this section is gratefully acknowledged.

which is not predicated on a moral value judgment. This point of view makes it difficult for the Vietnamese to see the war in Vietnam as a U.S.-China confrontation rather than a civil war with external support.

We see the confrontation in Vietnam as a War of Liberation straight out of Mao Tse-tung's textbook on guerrilla warfare. Superposed is the counterforce engagement between PAVN/Main Force VC and ARVN/FWMAF. The seemingly singular characteristic of this conflict loses much of its peculiarity when viewed as a combination countervalue-counterforce engagement. The remaining difference lies mainly in the makeup of the force and value elements and the counterstrategies rather than in some essential aspect.

Those endeavors that aim to destroy or neutralize the enemy's force elements or value elements are referred to as "counterforce strategy," and "countervalue strategy," respectively. While the force elements are easily identified as PAVN/VC Main Force, the value elements are more elusive.

Value Elements

The means for conducting war as well as the objectives of the war contain value elements. With respect to the former, one is familiar with the notion of "targets of military value" which may include sectors of industry, lines of communication, sources of energy, other resources, etc. The bombardment of North Vietnam is a typical countervalue action. Scorched earth strategy, either defensively or offensively pursued, constitutes countervalue strategy. All of these actions affect the conduct of the war directly but only in a secondary way influence the objectives of the war which are the establishment of an independent noncommunist government.

So far we have discussed value destruction rather than value denial. In scorched earth strategy, destruction is used as a means of denial; if, however, the war aims are the acquisition of certain value elements, then destruction is an unacceptable means of denial. The peculiarity of the war in Vietnam is that the most important value elements are the people. People are active rather than passive value elements

(e.g., territory) and consequently tend to interact with and respond to any strategy. This tends to complicate the situation considerably.

It is the people who, as the source of military strength, are military targets. When looked at from the point of view of the war objectives (which is the political control of the population) the people are the value elements that should be denied to the enemy rather than destroyed. In other words, the people are both the ends and means in the struggle.

To facilitate the visualization of the interaction of countervalue and counterforce strategies and substrategies, we constructed a simple paradigm.

STRATEGIC PARADIGM

Counterforce	Military Nonmilitary	Destructive Nondestructive
Countervalue	Military Nonmilitary	Destructive Nondestructive

Some of the more obvious substrategies which can be derived therefrom are described below. The listing is primarily illustrative of a rational methodology for the classification of functional measures.

Strategic Concept: Counterforce

Substrategies	Desired Effect
Military - destructive:	
Conventional military operation	Force destruction
Military - nondestructive:	
Naval blockade	Force supply denial
Occupation of territory	Force mobility denial
Nonmilitary - destructive:	
Not applicable	
Nonmilitary - nondestructive:	
Political settlement	Force neutralization

Strategic Concepts: Countervalue	Value Element: People
Substrategies	Desired Effect
Military - destructive:	
War of attrition	Value destruction
Crop destruction	Resource destruction
Military - nondestructive:	
Occupation of territory	Population movement control
	Food source denial
POW's, refugees	Value denial
Nonmilitary - destructive:	
Terror	Value destruction
Nonmilitary - nondestructive:	
Revolutionary Development	Value denial
Chieu Hoi	Value denial

It is interesting to note by examination of the effects column how weakly coupled the counterforce engagements are to the countervalue actions. The reason is fairly obvious--the force elements on either side do not control the value elements which are the true objectives of the war (i.e., value denial). Since the population is not protected by force elements from either side, it follows that the counterforce engagements must be fought for different objectives. The objectives are to raise the cost of the war and demoralize the enemy. That does not make the outcome of the contest any less important than if it were fought over the possession of territory, nor does it leave one the option not to engage the opposing force. In that sense, the counterforce war is conventional.

The oft repeated statement that the ultimate war objective is to "win the hearts and minds" of the population is properly reflected in the countervalue paradigm.

When we examine counter-countervalue strategies, however, we find a crucial difference between conventional value elements and people. People, in contrast to

real estate, are mobile and are able to resist actively the transfer of authority (i.e., value denial) by

A. Civil disobedience, and

B. Organized violence--guerrilla warfare.

We call this counter-countervalue strategy value resistance.

Within the pacification effort (see p.14), RD is the only activity that addresses the problem of value resistance directly. We use the word directly to indicate our appreciation of other contributory factors, such as the counterforce engagements.

APPENDIX G

GLOSSARY AND DEFINITIONS

GLOSSARY

AID or USAID	Agency for International Development
ARVN	Army of Vietnam
CAC	Combined Action Company
CG	Census Grievance
CIA	Central Intelligence Agency
CICV	Combined Intelligence Center Vietnam
COSVN	Central Office for South Vietnam
CTZ	Corps Tactical Zone
DRV	Democratic Republic of Vietnam (North Vietnam)
FWMAF	Free World Military Assistance Forces
GVN	Government of (South) Vietnam
JAC	Joint Action Company
LOC	Lines of Communication
MACV	Military Assistance Command Vietnam
MAF	Marine Amphibious Force
MICV	Military Interrogation Center Vietnam
MORD	Ministry of Revolutionary Development (GVN)
NLF	National Liberation Front
OCO	Office of Civil Operations
PAVN	People's Army of (North) Vietnam
PF	Popular Force
PRP	People's Revolutionary Party
RD	Revolutionary Development
RF	Regional Forces
SVN	South Vietnam
TAOR	Tactical Area of Responsibility
US AMB	United States Ambassador
USOM	United States Overseas Mission
VC	Viet Cong

DEFINITIONS

Cadre

A term collectively applied to the earlier RD team. Also sometimes used to mean an individual with a particular mission, e.g., Census Grievance cadre.

Chieu Hoi

A military or civil member of COSVN/NLF who turns himself in to GVN/FWMAF.

Counterforce Engagement

A military confrontation involving conventionally organized regular or Main Force elements as distinguished from combat operations against local guerrillas, although local guerrillas as they support Main Force or PAVN units could be involved.

Counterguerrilla Operations

A military operation against regional or local irregulars.

Guerrilla -- an irregular.

Local guerrilla -- a part-time irregular of a hamlet or village.

Regional guerrilla -- a full-time irregular who operates at district, province, or regional level.

Hard core guerrilla -- a full-time politically indoctrinated irregular.

Main Force guerrilla -- a member of an elite irregular force, organized and trained as a unit, comprised of full-time combat personnel.

Infrastructure

Political and administrative organizations through which the populace is controlled (see also p. 23).

Pacification

The program to bring security, economic development, and political participation in government (see also p. 14).

Revolutionary Development

A program whereby selected, trained individuals, living and working with the populace, assist in the implementation of GVN pacification programs.

Unclassified

Security Classification

DOCUMENT CONTROL DATA - R & D

(Security classification of title, body of abstract and indexing annotation must be entered when the overall report is classified)

1. ORIGINATING ACTIVITY *(Corporate author)*

Institute for Defense Analyses

2a. REPORT SECURITY CLASSIFICATION

Confidential

2b. GROUP

4

3. REPORT TITLE

Pacification in Vietnam: A Survey (U)

4. DESCRIPTIVE NOTES *(Type of report and inclusive dates)*

Research Paper P-340, December 1967

5. AUTHOR(S) *(First name, middle initial, last name)*

Joshua Menkes, Raymond G. Jones, Col., USA

6. REPORT DATE

December 1967

7a. TOTAL NO. OF PAGES

105

7b. NO. OF REFS

7

8a. CONTRACT OR GRANT NO.

DAHC15 67 C 0011

b. PROJECT NO.

c. T-55

d.

9a. ORIGINATOR'S REPORT NUMBER(S)

P-340

9b. OTHER REPORT NO(S) *(Any other numbers that may be assigned this report)*

NA

10. DISTRIBUTION STATEMENT

In addition to security requirements which apply to this document and must be met, each transmittal outside the agencies of the U.S. Government must have prior approval of DDR&E, Deputy Director (Southeast Asia Matters).

11. SUPPLEMENTARY NOTES

NA

12. SPONSORING MILITARY ACTIVITY

NA

13. ABSTRACT

This report presents a political analysis of the pacification effort in Vietnam. It is based upon numerous interviews both in the United States and Vietnam. The purpose of this paper is to present a discussion of some of the problems, policies, and actions in the pacification program in South Vietnam, and a constructive critique of certain elements in that program with primary attention directed to the Revolutionary Development Program. Some observations are made on several peripheral issues such as the urban situation, the counterforce engagement, and the counterguerrilla engagement. Specific conclusions and recommendations are made regarding means to effect improvements in both the military and nonmilitary aspects of the pacification program. (U)

DD FORM 1 NOV 65 1473

Unclassified

Security Classification

Security Classification

14. KEY WORDS	LINK A		LINK B		LINK C	
	ROLE	WT	ROLE	WT	ROLE	WT

Security Classification