THIS FILE IS MADE AVAILABLE THROUGH THE DECLASSIFICATION EFFORTS AND RESEARCH OF:

THE BLACK VAULT

THE BLACK VAULT IS THE LARGEST ONLINE FREEDOM OF INFORMATION ACT / GOVERNMENT RECORD CLEARING HOUSE IN THE WORLD. THE RESEARCH EFFORTS HERE ARE RESPONSIBLE FOR THE DECLASSIFICATION OF THOUSANDS OF DOCUMENTS THROUGHOUT THE U.S. GOVERNMENT, AND ALL CAN BE DOWNLOADED BY VISITING:

HTTP://WWW.BLACKVAULT.COM

YOU ARE ENCOURAGED TO FORWARD THIS DOCUMENT TO YOUR FRIENDS, BUT PLEASE KEEP THIS IDENTIFYING IMAGE AT THE TOP OF THE .PDF SO OTHERS CAN DOWNLOAD MORE!

Item 1

ADVANCED RESEARCH PROJECTS AGENCY
Washington 25, D. C.

April 25, 1963

MEMORANDUM FOR: Members and Affiliates of the Intergalactic Computer Network

FROM : J. C. R. Licklider

SUBJECT : Topics for Discussion at the Forthcoming Meeting

First, I apologize humbly for having to postpone the meeting scheduled for 3 May 1963 in Palo Alto. The ARPA Command & Control Research office has just been assigned a new task that must be activated immediately, and I must devote the whole of the coming week to it. The priority is externally enforced. I am extremely sorry to inconvenience those of you who have made plans for May 3rd. Inasmuch as I shall be in Cambridge the rest of this week, I am asking my colleagues here to re-schedule the meeting, with May 10th, Palo Alto, as target time and place.

The need for the meeting and the purpose of the meeting are things that I feel intuitively, not things that I perceive in clear structure. I am afraid that that fact will be too evident in the following paragraphs. Nevertheless, I shall try to set forth some background material and some thoughts about possible interactions among the various activities in the overall enterprise for which, as you may have detected in the above-Subject, I am at a loss for a name.

In the first place, it is evident that we have among us a collection of individual (personal and/or organizational) aspirations, efforts, activities, and projects. These have in common, I think, the characteristics that they are in some way connected with advancement of the art or technology of information processing, the advancement of intellectual capability (man, man-machine, or machine), and the approach to a theory of science. The individual parts are, at least to some extent, mutually interdependent. To make progress, each of the active research needs a software base and a hardware facility more complex and more extensive than he, himself, can create in reasonable time.

In pursuing the individual objectives, various members of the group will be preparing executive and monitoring routines, languages and compilers, debugging systems and documentation schemes, and substantive computer programs of more or less general usefulness. One of the purposes of the meeting--perhaps the main purpose--is to explore the possibilities for mutual advantage in these activities--to determine who is dependent upon whom for what and who may achieve a bonus benefit from which activities of what other members of the group. It will be necessary to take into account the costs as well as the values, of course. Nevertheless, it seems to me that it is much more likely to be advantageous than disadvantageous for each to see the others' tentative plans before the plans are entirely crystalized. I do not mean to argue that everyone should abide by some rigid system of rules and constraints that might maximize, for example, program interchangeability. But, I do think that we should see the main parts of the several projected efforts, all on one blackboard, so that it will be more evident than it would otherwise be, where network-wide conventions would be helpful and where individual concessions to group advantage would be most important.

It is difficult to determine, of course, what constitutes "group advantage." Even at the risk of confusing my own individual objectives (or ARPA's) with those of the "group," however, let me try to set forth some of the things that might be, in some sense, group or system or network desiderata.

There will be programming languages, debugging languages, time-sharing system control languages, computer-network languages, data-base (or file-storage-and-retrieval languages), and perhaps other languages as well. It may or may not be a good idea to oppose or to constrain lightly the proliferation of such. However, there seems to me to be little question that it is desirable to foster "transfer of training" among these languages. One way in which transfer can be facilitated is to follow group consensus in the making of the arbitrary and nearly-arbitrary decisions that arise in the design and implementation of languages. There would be little point, for example, in having a diversity of symbols, one for each individual or one for each center, to designate "contents of" or "type the contents of." It seems to me desirable to have as much homogenity as can reasonably be achieved in the set of sub-languages of a given language system--the system, for example, of programming, debugging, and time-sharing-control languages related to JOVIAL on the Q-32, or the system related to Algol (if such were developed and turned out to be different from the JOVIAL set) for the Q-32 computer, or the set related to FORTRAN for a 7090 or a 7094.

Dictating the foregoing paragraph led me to see more clearly than I had seen it before that the problem of achieving homogeneity within a set of correlated languages is made difficult by the fact that there will be, at a give time, only one time-sharing system in operation on a given computer, whereas more than one programming language with its associated debugging language may be simultaneously in use. The time-sharing control language can be highly correlated only with one programming and debugging language pair. Insofar as syntax is concerned, therefore, it seems that it may be necessary to have a "preferred" language for each computer facility or system, and to have the time-sharing control language be consistent with the preferred. Insofar as semantics is concerned--or, at least, insofar as the association of particular symbols with particular control functions is concerned--I see that it would be possible, though perhaps inconvenient, to provide for the use, by several different operators, of several different specific vocabularies. Anyway, there seems to me to be a problem, or a set of problems, in this area.

There is an analogous problem, and probably a more difficult one, in the matter of language for the control of a network of computers. Consider the situation in which several different centers are netted together, each center being highly individualistic and having its own special language and its own special way of doing things. Is it not desirable, or even necessary, for all the centers to agree upon some language or, at least, upon some conventions for asking such questions as "What language do you speak?" At this extreme, the problem is essentially the one discussed by science fiction writers: "How do you get communications started among totally uncorrelated "sapient" beings?" But, I should not like to make an extreme assumption about the uncorellatedness. (I am willing to make an extreme assumption about the sapience.) The more practical set of questions is: Is the network control language the same thing as the time-sharing control language? (If so, the implication is that there is a common time-sharing control language.) Is the network control language different from the time-sharing control language, and is the network-control language common to the several netted facilities? Is there no such thing as a network-control language? (Does one, for example, simply control his own computer in such a way as to connect it into whatever part of the already-operating net he likes, and then shift over to an appropriate mode?)

In the foregoing paragraphs, I seem to have lept into the middle of complexity. Let me approach from a different starting point. Evidently, one or another member of this enterprise will be preparing a compiler, or compilers, for modifying existing programs that compile FORTRAN, JOVIAL, ALGOL, LISP and IPL-V (or V-1, or V-11). If there is more than one of any one of the foregoing, or of any one of others that I do not foresee, then it seems worthwhile to examine the projected efforts for compatibility. Moreover, to me, at least, it seems desirable to examine the projected

efforts to see what their particular features are, and to see whether there is any point in defining a collection of desirable features and trying to get them all into one language and one system of compilers. I am impressed by the argument that list-structure features are important as potential elements of ALGOL or JOVIAL, that we should think in terms of incorporating list-structure features into existing languages quite as much as in terms of constructing languages around list-structures.

It will possibly turn out, I realize, that only on rare occasions do most or all of the computers in the overall system operate together in an integrated network. It seems to me to be interesting and important, nevertheless, to develop a capability for integrated network operation. If such a network as I envisage nebulously could be brought into operation, we would have at least four large computers, perhaps six or eight small computers, and a great assortment of disc files and magnetic tape units--not to mention the remote consoles and teletype stations--all churning away. It seems easiest to approach this matter from the individual user's point of view--to see what he would like to have, what he might like to do, and then to try to figure out how to make a system within which his requirements can be met. Among the things I see that a user might want to have, or to do, are the following:

(Let me suppose that I am sitting at a console that includes cathode-ray-tube display, light-pen, and typewriter.) I want to retrieve a set of experimental data that is on a tape called Listening Tests. The data are called "experiment 3." These data are basically percentages for various signal-to-noise ratios. There are many such empirical functions. The experiment had a matrix design, with several listeners, several modes of presentation, several signal frequencies, and several durations. I want, first, to fit some "theoretical" curves to the measured data. I want to do this in a preliminary way to find out what basic function I want to choose for the theoretical relation between percentage and signal-to-noise ratio. On another tape, called "Curve Fitting," I have some routines that fit straight lines, power functions, and cumulative normal curves. But, I want to try some others, also. Let me try, at the beginning, the functions for which I have programs. The trouble is, I do not have a good grid-plotting program. I want to borrow one. Simple, rectangular coordinates will do, but I would like to specify how many divisions of each scale there should be and what the labels should be. I want to put that information in through my typewriter. Is there a suitable grid-plotting program anywhere in the system? Using prevailing network doctrine, I interrogate first the local facility, and then other centers. Let us suppose that I am working at SDC, and that I find a program that looks suitable on a disc file in Berkeley. My programs were written in JOVIAL. The programs I have located through the system were written in FORTRAN. I would like to bring them in as relocatable binary

programs and, using them as subroutines, from my curve-fitting programs, either at "bring-in time" or at "run-time."

Supposing that I am able to accomplish the steps just described, let us proceed. I find that straight lines, cubics, quintics, etc., do not provide good fits to the data. The best fits look bad when I view them on the oscilloscope.

The fits of the measured data to the cumulative normal curve are not prohibitively bad. I am more interested in finding a basic function that I can control appropriately with a few perimeters than I am in making contact with any particular theory about the detection process, so I want to find out merely whether anyone in the system has any curve-fitting programs that will accept functions supplied by the user or that happen to have built-in functions roughly like the cumulative normal curve, but assymmetrical. Let us suppose that I interrogate the various files, or perhaps interrogate a master-integrated, network file, and find out that no such programs exist. I decide, therefore, to go along with the normal curve.

At this point, I have to do some programming. I want to hold on to my data, to the programs for normal curve fitting, and to the display programs that I borrowed. What I want to do is to fit cumulative normal curves to my various sub-sets of data, constraining the mean and the variance to change slowly as I proceed along any of the ordinal or ratio-scale dimensions of my experiment, and permitting slightly different sets of perimeters for the various subjects. So, what I want to do next is to create a kind of master program to set perimeter values for the curve-fitting routines, and to display both the graphical fits and the numerical measures of goodness of fit as, with light-pen and graphs of perimeters versus independent variables on the oscilliscope screen, I set up and try out various (to me) reasonable configurations. Let us say that I try to program this in JOVIAL, but that I have to test the new program repeatedly on my actual data, with the subordinate programs already mentioned, until I get the thing to work.

Let us suppose that I finally do succeed, that I get some reasonable results, photograph the graphs showing both the empirical data and the "theoretical" curves, and retain for future use the new programs. I want to make a system of the whole set of programs and store it away under the name "Constrained-perimeter Normal-curve-fitting System." But, then suppose that my intuitively natural way of naming the system is at odds with the general guidelines of the network for naming programs. I would like to have this variance from convention called to my attention, for I am a conscientious "organization man" when it comes to matters of program libraries and public files of useful data.

In the foregoing, I must have exercised several network features. I engaged in information retrieval through some kind of a system that looked for programs to meet certain requirements I had in mind. Presumably, this was a system based upon descriptors, or reasonable facsimiles thereof, and not, in the near future, upon computer appreciation of natural language. However, it would be pleasant to use some of the capabilities of avant-garde linguistics. In using the borrowed programs, I effected some linkages between my programs and the borrowed ones. Hopefully, I did this without much effort--hopefully, the linkages were set up--or the basis for making them was set up--when the programs were brought into the part of the system that I was using. I did not borrow any data, but that was only because I was working on experimental data of my own. If I had been trying to test some kind of a theory, I would have wanted to borrow data as well as programs.

When the computer operated the programs for me, I suppose that the activity took place in the computer at SDC, which is where we have been assuming I was. However, I would just as soon leave that on the level of inference. With a sophistocated network-control system, I would not decide whether to send the data and have them worked on by programs somewhere else, or bring in programs and have them work on my data. I have no great objection to making that decision, for a while at any rate, but, in principle, it seems better for the computer, or the network, somehow, to do that.

At the end of my work, I filed some things away, and tried to do it in such a way that they would be useful to others. That called into play, presumably, some kind of a convention-monitoring system that, in its early stages, must almost surely involve a human criterian as well as machine processing.

The foregoing (unfortunately long) example is intended to be a kind of example of example. I would like to collect, or see someone collect, a considerable number of such examples, and to see what kind of software and hardware facilities they imply. I have it well in mind that one of the implications of a considerable number of such examples would be a very large random-access memory.

Now, to take still another approach to this whole matter, let me string-together a series of thoughts that are coming to mind. (I was interrupted at this point, and the discussion almost has to take a turn.) First, there is the question of "pure procedure." I understand that the new version of JOVIAL is going to compile programs in "pure-procedure" style. Will the other compilers at the other centers do likewise? Second, there is the question of the interpretation, at one center, of requests directed to it from

another center. I visualize vaguely some kind of an interpretive system that would serve to translate the incoming language into commands or questions of the form in terms of which the interrogated center operates. Alternatively, of course, the translation could be done at the sending end. Still alternatively, the coordination could be so good that everybody spoke a common language and used a common set of formats. Third, there is the problem of protecting and updating public files. I do not want to use material from a file that is in the process of being changed by someone else. There may be, in our mutual activities, something approximately analogous to military security classification. If so, how will we handle it?

Next, there is the problem of incremental compiling. Am I correct in thinking that Perlis, with his "threaded lists," has that problem, and the related problem of compile-test-recompile, essentially solved?

Over on the hardware side, I am worried that the boundry-registered problem, or more generally the memory-protection problem, may be expensive to solve on the Q-32 and both difficult and expensive to solve on other machines, and I am worried that the problem of swapping or transferring information between core and secondary memory will be difficult and expensive on 7090s and 7094s--and I worry that time-sharing will not be much good without fast swaps or transfers. What are the best thoughts on these questions? In what state are our several or collective plans?

Implicit in the long example was the question of linking subroutines at run time. It is easy to do the calling, itself, through a simple directory, but it seems not to be so simple to handle system variables. Maybe it is simple in principle and perhaps I should say that it seems possibly infeasible to handle the linking of system variables at run time through tables or simple indirect addressing schemes.

It is necessary to bring this opus to a close because I have to go catch an airplane. I had intended to review ARPA's Command-and-Control interests in improved man-computer interaction, in time-sharing and in computer networks. I think, however, that you all understand the reasons for ARPA's basic interest in these matters, and I can, if need be, review them briefly at the meeting. The fact is, as I see it, that the military greatly needs solutions to many or most of the problems that will arise if we tried to make good use of the facilities that are coming into existence. I am hoping that there will be, in our individual efforts, enough evident advantage in cooperative programming and operation to lead us to solve the problems and, thus, to bring into being the technology that the military needs. When problems arise clearly in the military context and seem not to appear in the research context, then ARPA can take steps to handle them

on an ad hoc basis. As I say, however, hopefully, many of the problems will be essentially the same, and essentially as important, in the research context as in the military context.

In conclusion, then, let me say again that I have the feeling we should discuss together at some length questions and problems in the set to which I have tried to point in the foregoing discussion. Perhaps I have not pointed to the important problems--certainly I have not pointed to all the problems. Hopefully, the discussion may be a little less rambling than this effort that I am now completing.

J. C. R. Licklider

J. C. R. Licklider, Director MQ for
Behavioral Sciences
Command & Control Research

Distribution:

System Dev. Corp.
Dr. Donald L. Drukey, Director ARPA Command Research Project
J. I. Schwartz, Head of Time-Sharing Project
R. von Buelow, Head Development Project Lab

Stanford Research Institute
Dr. D. C. Engelbart, ~~Sr. Research Engineer~~
Dr. John H. Wensley, ~~Research Engineer~~
Dr. Roy Amara

Stanford University
Dr. John McCarthy

University of California (Berkeley) → Dr. David C. Evans
Dr. Harry D. Huskey, ~~Acting Director, Computing Center~~
Professor Edward Feigenbaum

RAND
Mr. Keith W. Uncapher

University of California (Los Angeles)
Professor George W. Brown, ~~Director Data Processing Center~~ Sproul

Carnegie Institute of Technology
Professor Alan J. Perlis
Professor Allen Newell

Information International, Inc.
Mr. Edward Fredkin, ~~President~~
~~Mr. Benjamin M. Gurley~~

Mass. Institute of Technology
Professor Robert M. Fano
~~Research Lab of Electronics~~
Prof. Fernando J. Corbato
Prof. Marvin Minsky
Mills

Thompson-Ramo-Woolridge
Dr. Glenn Culler

Item 2

UNIVERSITY OF CALIFORNIA, LOS ANGELES

BERKELEY • DAVIS • IRVINE • LOS ANGELES • RIVERSIDE • SAN DIEGO • SAN FRANCISCO SANTA BARBARA • SANTA CRUZ

DEPARTMENT OF ENGINEERING
LOS ANGELES, CALIFORNIA 90024

April 27, 1967

Mr. Robert Taylor
Mr. Larry Roberts
ODS/ARPA
3E175 Pentagon
Washington, D.C.

Dear Bob and Larry,

This is in response to your note of April 24th and the Message Switching Network Proposal which Larry handed me at the Spring Joint Computer Conference.

I want to go on record as being in favor of the proposal for a PDP-8-like machine at each node. It will strongly lend a uniformity to experimentation and to possible performance measurements.

As we reported by phone, Len Kleinrock will be joining you at the May 18th meeting.

We are still exploring possible interest of people in Theater Arts with respect to the ARPA documentary. I will let you know as soon as we hear something.

Very truly yours,

Gerry

Gerald Estrin
Professor of Engineering

GE:lw

Message Switching Network Proposal

After the Network discussion at the ARPA Contractors' Meeting, Wes Clark made a recommendation which deserves serious consideration as a method of implementing the proposed network. This plan was discussed privately by some of the people and is presented here to acquaint everyone with the concept.

The plan considered in the general meeting was to connect all of the computers by phone lines and data sets so as to enable them to establish communication with any other node using a line switching technique. However, the basic function that would be performed by a small piece of each computer and the phone lines is to perform a message switching and transmission function. The concept which Wes proposed was to insert a small computer like the PDP-8 between each participant's computer and the transmission line network. The small computer, an Interface Message Processer (IMP), would perform the functions of dial up, error checking, retransmission, routing and varification. Thus the set of IMP's plus the telephone lines and data sets would constitute a Message Switching Network. The protocol which we are intending to establish would define the communication format between the IMP's. The interface between the participant's computer and his IMP would now be a digital interface of a much simpler sort so that no considerations of error checking, retransmission and inter-network routing would have to be considered. Messages could be supplied which merely requested that a message be sent to another node stating the priorities for speed of transmission and, if desired, error probability. That is, if a message consists solely of non-critical data, it could be sent unchecked through the network at a lower cost.

If the computer selected was the PDP-8, we could probably utilize the modified version which Gordon Bell is developing. This computer could most likely be mass purchassed from DEC thereby obtaining a very reasonable cost. Of course, other similar computers would be considered. Within the IMP there would be a section of program devoted to the network functions previously described. Some of the memory would be used for buffer space and some would be left free for additional program to re-format the information at the interface to the main computer.

Disadvantages

It is clear that the use of a small computer adds an additional cost to each installation of perhaps $20K. It is not clear what the saving, if any, would be in reduced cost for the main computer interface or what the

(Networking writeup for FY 68 Budget preparation.)

Network File

The first is a proposed increase in our Network Subproject of $6M per year over the period of the current five-year force structure. An experimental system is proposed which would link three or more large general purpose time-sharing systems in a computer network creating two major capabilities not now possible: (1) the ability of a user to create, debug and execute pure procedure on-line from any node to any other node, and (2) the ability to use a recently changed procedure without regard to the node from which it was changed. Large scale information retrieval data banks as they are discussed in the technical and lay literature will remain in the realm of imagination until these two problems are solved. We are not able to initiate this project to the detriment of our present efforts in graphics, man-machine interaction, parallel processing, language development or physical interaction for these efforts will result in the applications necessary to users of the proposed network.

saving in compute load would be. Some people feel that their present computer could handle the data sets directly as easily as interfacing with a small computer since their computer would still have to consider which messages were for which users and utilize a protocol similar to the one used on the transmission network. Also, if an intelligent console such as the DEC 338 was used as a node in the network and it was required that an additional computer be used as an interface to the network, there would be a marked increase in the cost of the terminal.

Advantages

The major advantage of this plan is that a unified, straightforward design of the network can be made and implemented without undue consideration of the various contractors' buffer space, interpret speed and other machine requirements. The interface to the contractor's computer would be a much simpler digital connection with an additional flexibility provided by programming the IMP. The network section of the IMP's program would be completely standard and provide guaranteed buffer space and uniform characteristics, thus the entire planning job is sustantially simplified. The data sets and transmission lines utilized between the small computers would most likely be standardized upon, but as changes occurred in the communication tariffs or data rates available, it would be much more straightforward to modify just the small computer net rather than twenty different computers. As soon as the need became apparent, additional small computers could be located at strategic connection points within the network to concentrate messages over cross-country lines. Finally, the modifications required to currently operating systems would be substantially less if we utilized these small computers since there will be no requirement to find buffer spaces, hold messages for retransmission, verify reception of messages and dial up telephone lines.

The basic advantage of utilizing small computers to run a message switching network is an increased speed for the realization of the network, a decreased load on the main computer and improved flexibility as changes are required. The technique also provides a distinct network entity which is useful in presenting the network publically. In cases where a participant felt his computer should be used to connect to the telephone system directly, this would, of course, be possible if he followed the approved protocol and conventions; however, the requirements on his computer might be somewhat more demanding as to required buffer space and message rerouting. If we agree that the use of the small computer is justified, we will need to develop an additional protocol for the interface between the small computer network program and its main computer formatting program. This protocol would not be extremely different from the telephone line protocol except that it would be defined in terms of data in memory words rather than on a transmission line.

MEMORANDUM, June 6, 1967
TO: Dan Bobrow and Robert Sutherland
FROM: J. C. R. Licklider
SUBJECT:

Item 3

11 layer
destroy of Xtra
Atomic Network T.

The Purpose and Content of BONOFORM alias SUTHERN COMFORT

Introduction

Bobrow, Sutherland and Licklider constitute a committee of the ARPA network circle. The purpose of the committee is in the general vicinity of x, where x is to do something about protocol, formats, conventions, or language for messages transmitted through the ARPA network. The purpose of this memorandum is to clarify the purpose of the committee and to relate the general nature of the expected product of the committee to the context of the ARPA network. This memorandum will not describe the expected product.

The expected product of the committee is a language for defining message forms of formats. As suggested opposite "Subject," I am proposing to call the language either "Bobrow Normal Form" or "Sutherland Network Communication Format." "Bonoform" has the advantage of compactness and will be used in the remainder of this memorandum.

Context and Purpose

The ARPA network circle meeting of May 18, 1967, decided, among other things, to adopt the Interface Message Processor concept and to use ASCII code and its rules without deviation in the interior communication language of the network. Each IMP will be either (preferably) a small computer or (acceptably) a functional part of a large one. In the former case, the interface between the local part of the node and the part of the node dominated by network-wide conventions will be a software-software interface inside the IMP. In the latter case, the part of the large computer dominated by network-wide conventions will perforce look to the communication lines and to the rest of the node exactly like an IMP. The interior communication language, which I shall

abbreviate INTERCOM (or Intercom, since - perhaps because of their relative unavailability - I prefer lower-case letters), is the language that flows through the communication lines and switches and within the part of the IMPs that are dominated by network-wide conventions. The meeting of May 11 made progress toward the specification of format for Intercom messages. However, only the headers and trailers of such messages are strongly constrained by the specifications. All that is said about the bodies of such messages is that they shall conform with the ASCII rules. Insofar as the body messages are made up of characters, the characters must be ASCII characters of seven identifying bits and one parity bit. Insofar as the body messages contain pure binary information, it must be 6-bit binary; the other two bits are preempted by ASCII constraints.

As the primitive mind works, the next question concerns further specification of the language of the body (i.e., not Intercom header or trailer) messages. However, the minds of two-thirds of the present committee are not primitive. The next question therefore concerns not the body language itself but a language for describing the formats of body messages. This message-format-describing language is what I am calling Bonoform.

Chalmers Sherwin has been (and is) advocating a system for handling the problem of formats for messages of the kind with which we are concerned. Two elements of his system are a standards office and a standard header. Anyone can invent or define a format, send it to the standards office, and (if it meets the simple rules) have it registered, assigned a format number, and listed. Then, when he sends a message, he need only put the format number in its proper place in the standard header. In the body that follows the header, he transmits whatever the format calls for, and his recipient, who presumably has a copy of the format description, decodes, or interprets the message accordingly.

Instead of relying on the standards office, of course, one could

send the format description as a message, providing the format of the format description were agreed upon by both sender and receiver. It is precisely the purpose of Bonoform to define the format of format description and other parts of the language of message descriptions.

Schedule of Work

At a committee meeting yesterday, the general character of Bonoform was agreed upon. It will be somewhat like Backus Normal Form. It will provide for assignments of character (i.e., characterization) and for assignments of value. All variables that may be assigned values will be global. Characterization may be hierarchical. That is, a format may be defined by a statement containing terms that are defined (i.e., formats that are characterized) in other statements. And so on. But the language is intended to be very simple. It will not be a programming language.

Bobrow and Sutherland see problems arising, problems familiar to them in other experiences in the field of formal languages. Bobrow is going to write up a preliminary description of the language and a brief discussion of the problems.

Then there will be another committee meeting.

The target date for unveiling of the language is July 1, 1967.

ADVANCED RESEARCH PROJECTS AGENCY
Washington, D. C. 20301

June 21, 1968

Item 4

MEMORANDUM FOR THE DIRECTOR, PROGRAM MANAGEMENT

SUBJECT: Interactive Computer Network Communication System

The purpose of this memorandum is to request an ARPA order be written to ARO-Durham for $563 K to initiate a contract for the design, construction, installation, test and maintenance of interface message processors (IMPs) to form a communication system to support the ARPA network activities. The contractor is to be selected by competition between selected bidders.

APP No. 723, submitted with this memorandum, describes the requirements for a network and the need for a distributed store and forward communications system. A detailed specification has been written to permit potential contractors to bid on providing the IMPs. This bid will be for total system responsibility. Bidders who are not computer manufacturers must therefore negotiate with a manufacturer on the price and delivery of the hardware which they select. The initial contract will request the design, production, delivery, test, and evaluation of four IMPs. The initial installations will be at Stanford Research Institute; U.C., Santa Barbara; UCLA; and the University of Utah.

The development of this distributed communication system will not only provide the communications capability required for the ARPA computer research facilities, but will also be a unique prototype of future communication systems. Additionally, this network will provide an opportunity to demonstrate a form of communications organization recommended in a distributed digital network study by the RAND Corporation.

Administrative Considerations

The $563 K should provide sufficient funds for the IMP design, the purchase of four IMPs and their installation at the initial nodes. A small network which will be created between these four nodes will be used mainly to evaluate the performance of the store and forward communication system. If the basic design proves satisfactory, the extension of the network to include additional nodes will be considered. Fiscal 1969 funds have been programmed for this purpose.

Transfer Plan

It is anticipated that the communication system being developed will be attractive to the common carriers as a potential data service. After four nodes of the network can be demonstrated, a common carrier will be asked to make an economic evaluation addressing the desirability of offering such communications as a service. When the entire net is established and operating smoothly, the carrier may be requested to manage the net, thus directly providing digital message transmission as a tariffed service. This will be particularly desirable when the computer network is sufficiently developed to include more research centers such as the NSF supported activities.

Reporting Requirements

Quarterly progress reports, and final reports covering entire design and evaluation at the end of the initial contract.

Contractor Selection

To be selected through competitive evaluation by a panel of ARO-Durham and ARPA personnel.

Agent and Level of Support

ARO-Durham personnel have been involved in the preparation of the specification. Technical support will be requested of ARO-Durham; however, the project responsibilities should remain with ARPA.

Lawrence G. Roberts
Special Assistant for
Information Sciences

Enclosure
APP 723

Item 5

ADVANCED RESEARCH PROJECTS AGENCY
WASHINGTON, D. C. 20301

ARPA Order No. 1137
Program Code No. 8D30
Program Element No. 6.15.45.01.D
Industrial Priority Rating: DO

December 6, 1967 Date

TO: Commanding Officer
U. S. Army Research Office (Durham)
Box CM, Duke Station
Durham, North Carolina 27706

1. You are requested to initiate a four-month contract with Stanford Research Institute for a study related to the design and specification of a computer network. The work should be in accordance with the contractor's proposal No. ESU 67-92, "A Study of Computer Network Design Parameters", dated November 7, 1967, with work statement as follows:

a. The contractor will study the effects of selected network tasks upon Interface Message Processors (IMP's) and the communication facilities serving a highly responsive network of computers. Among the tasks to be studied are:

(1) The coding of the information exchanged between the IMP's (e.g., USACSII vs. non-USACSII, transparent binary transmission)

(2) Acknowledgement procedures (e.g., message block formation, restraint of message flow)

(3) Operational procedures (e.g., user access validation and control, recovery from abnormal conditions)

b. The effects of alternative design choices will be characterized in terms of IMP computational capacity, storage capacity, special hardware requirements, and loading of the communication facilities.

c. In carrying out this study, the contractor will communicate with other ARPA contractors who are potential participants in such a network.

2. The study should commence as soon as possible, not later than January 1, 1968. The total price is estimated to be $19,586; an additional amount of $214 is provided for ARO-D expenses in connection with monitoring this contract.

3. This Order makes available $19,800 under appropriation and account symbol "97X0400.1301 Research, Development, Test and Evaluation, Defense Agencies", for obligation by ARO-D on behalf of the Advanced Research Projects Agency, only for purposes necessary to accomplish the work specified herein. These funds are immediately available for direct obligation. The funds made available herein are not for the construction of facilities.

4. A final technical report should be prepared and submitted in accordance with the instructions set forth in the attachment to our memorandum dated September 13, 1966, subject: "ARPA Orders - General Requirements."

5. It is requested that two copies of each contract or contract modification awarded as a result of this Order be submitted to the Director, ARPA. In transmitting such documents, specific reference should be made to ARPA Order No. 1137.

6. The General Requirements as stated in the attachment to the ARPA memorandum of September 13, 1966, are included in this Order by reference.

E. Rechtin
Director

Copy to:
Secretary of the Army

Item 6

ADVANCED RESEARCH PROJECTS AGENCY
Washington, D. C. 20301

September 18, 1969

MEMORANDUM FOR THE DIRECTOR, PROGRAM MANAGEMENT

SUBJECT: Initiation of a Contract with Raytheon Corporation to Study "User System Interaction via the Network"

Please initiate action to obtain a contract with Raytheon Corporation to study "User System Interaction via the Network." The program is for 12 months at a total cost of $75,611.

Objective

The objective of the proposed program is to determine Host to Host protocol procedures to: (1) reduce the number of special conventions that a network user must know, and (2) reduce the number of special programs required in order to transmit data from one computer to another.

Background

Standardized conventions and formats would, in many cases, improve the effectiveness of the network. In many other cases standards would require undue reprogramming and hinder technological progress. In order to examine all the conflicting desires of the research groups of each node and evaluate the pros and cons of potential standards, an independent party is required; one who is technically qualified to select the important issues, digest the evidence, and make recommendations to ARPA. Currently there is a Network Working Group with members from each early network node which is deciding the initial protocol and conventions. However, a committee cannot be expected to investigate and solve the more difficult, longer range problems, particularly when the best solution may require considerable effort for some of the members.

Raytheon has evidenced considerable understanding and interest in these issues and proposes to have Thomas O'Sullivan attack the problem. This provides ARPA with an unbiased source of recommendations and will insure that sufficient effort is spent investigating and discussing the important issues. Besides being a respected computer scientist, Thomas

O'Sullivan is a noted behavioral scientist and will be able to address both the computer system questions and the human factors involved. In addition, he will provide a unique orientation to the group toward the problems of the Behavioral Science Data Centers which will eventually be part of the ARPA Network. The conventions associated with data sharing, the principal interest of the Behavioral Science projects, are particularly important to the long range success of the network. Due to this direct involvement with and support for these data centers, one-third of the Raytheon contract costs will be supported by the Behavioral Science Office.

Rationale

ARPA Program Plan 723 established the need and the impact of solving the problems involved in computer networks. This program plays an important role in the solution of those problems.

Statement of Work

Review command languages and system resources available to Network users.

Gain an intimate understanding of command language, user operating procedures and available user resources through direct on-line use.

Postulate specific examples of various operating modes of different types of network users and define operating procedures to handle these modes of operation.

Define a generalized ideal system to handle interhost operations, incorporating the defined procedures, showing how these operations ought to be handled in the network.

Prepare a report describing the defined system, arguing why it ought to be that way, and presenting both its merits and weaknesses in relation both to user operation and the system support required to provide it.

Administrative

IPT's share is $50,611 and this should be taken from Line Item D60200 for FY 70. Behavioral's share is $25,000 and these FY 70 funds should be taken from Line Item C20500.

The agent should be DSS-W because close interaction with IPT is required and a second technical monitor is unnecessary. Quarterly Management Reports and a Semi-Annual and Final Technical Report are desired.

SIGNED

Davis B. Bobrow
Acting Director
Behavioral Sciences

SIGNED

Lawrence G. Roberts
Acting Director for
Information Processing Techniques

NIC NEWSLETTER
16 January 1969

Item 7.

I INTRODUCTION

The Network Information Center (NIC) is a set of services to be offered by the Augmented Human Intellect Research Center (AHIRC) of the Stanford Research Institute (SRI) to the users of the ARPA Computer Network. These services make use of the AHIRC computer, an SDS 940. User access to the NIC will be primarily through the network, but alternate means such as phone calls, letters, etc., will also be used (at least initially).

A major goal of the NIC is to try to satisfy those information needs upon which the success of the "network experiment" will be most dependent. The NIC, then, is concerned with supplying information and documentation services -- as contrasted to other possible services such as project management, compiling, etc.

II NEEDS

User needs of concern to the NIC are as follows:

(1) Creation of Documents

Users will need to create documents for use by other network users and for their own use. After a document has been created the user may wish to inspect and/or modify it.

(2) Inspection of Documents

Users will need to examine (i.e. read) documents to various depths. Such an examination may be a prelude to subsequent modification actions or other retrieval actions.

(3) Modification of Documents

Users will need to modify documents of their own creation, whether to correct errors, add, delete, change, or merge. They will also desire to modify documents created by others.

(4) Searching for Documents

The user will need to be able to scan collections of documents to search for items relevant to his work at a given moment. If a search is successful the user will desire to inspect and/or retrieve documents that he selects.

(5) Retrieval of Documents

When a user has strong interest in a document, set of documents, or sections of documents, he will need to have a copy of the material for himself. The retrieval of such information may result in copies in various forms -- e.g. hardcopy (paper, microfilm) or softcopy (computer files).

III SERVICES

To satisfy these needs the NIC is expected to provide the following services:

(1) Access to NIC Services

This will be initially provided via the network and via "dialup" Dataphone lines for typewriters and low-speed CRT terminals. Later access will be provided via the network for high-performance CRT terminals.

(2) A Repository for a Collection of Documents

This collection will consist of documents contributed by network users or collected by the staff of the NIC. Elements of the collection will include research reports, user's guides, system and program descriptions, actual code, and papers of general user interest. The collection will be kept in various versions:

> In hardcopy, as microfilm and paper masters held at the NIC. Replicas would be routinely distributed to each network site and other selected organizations for the users.
>
> Special microfilm replicas of selected portions of the microfilm masters or the softcopy would be provided in microfilm form upon request.

A catalog will be one of the elements in the collection. It will list all material in the collection, whether it exists as softcopy, hardcopy, or any combination.

(3) A Documentation-Aid System

The system, oriented to typewriters and CRTs, will incorporate text editing and text restructuring facilities similar to those now available in the AHIRC On Line System (NLS).

The hierarchical structure, basic to the concept of the NLS, will be available for use in all documents held by the NIC. (It may, of course,be used simply as a list of paragraphs, headings, etc.) The documentation-aid system will assist the user in generating and using documents that exploit the possibilities of this structure.

A transcription service will be available at the NIC to transcribe hardcopy documents into a softcopy version to be held in the NIC. This service will permit the initital entry into the NIC held corpus of large numbers of existing documents and newly generated documents (at least during the initial phase of the network) without unduly burdening the user. It will provide a transition interval while users become acquainted with the NLS document structure format. Ultimately, it is assumed that documents will be originally written with the use of computer aids -- either on the user's computer or with NIC's document-aid system.

(4) A Query and Search System

This system will be applicable to softcopy and hardcopy versions of the collection. By means of the "content analyzer" (a feature of the present NLS) the user will able to construct content specifications for searching the NIC collection.

By means of links between documents and within any one document (another feature of the present NLS) the user will be able to follow predetermined "trails" through the NIC collection.

Plans are being made to develop a NIC catalog, encompassing the softcopy and hardcopy (microfilm) versions of the collection.

(5) A Retrieval and Output System

This system will have online, offline, softcopy, and hardcopy (microfilm) applications.

The user will be able to request a "copy" of the document for his use. This may be a softcopy for use through NIC aids, or for use at his own computer.

The user may also make special requests for hardcopy versions either on microfilm or on paper, both produced at the NIC. If he obtains a copy of the file at his machine he can, of course, produce his own hardcopy version.

It is expected that the user will typically desire selected "views" of the document, rather than the entire document itself. A view can be specified as to depth in the hierarchical file structure, truncation (number of lines of each statement), and section or sections of the file or files.

The view will be chosen by the user and will depend upon the depth with which he wishes to examine the document and the type of terminal at his disposal. A typewriter user will desire smaller volumes of material than will the CRT user, because of the slow speed of the terminal; the range of possible views will reflect this.

IV INITIAL PLANS

Users to be Served

The initial plan covers the period from the present to December 1969. During this interval the network will be in its developmental stage and will be unavailable for general use. The parties concerned with this development will be ARPA, BBN (the network contractor), and the four initial sites (UTAH, UCSB, UCLA, SRI), These parties are the primary users to be served during this time with the emerging NIC services. NIC's specific service features are being oriented toward the needs of these users. Users at the other 15 sites are expected to use the NIC to a lesser degree during this period, but will become increasingly active during the latter part of 1969 and through 1970.

Initial Services

The focus of the NIC will be upon the development of its basic collection of documents, a Typewriter-Oriented Documentation-Aid System (TODAS), and a early version of the on-line search and retrieval process.

Information in the initial collection is being oriented to documents pertaining to the network development, and to descriptions of systems and subystems to be available at the initial sites. This information consists of program documentation, system descriptions, user manuals, protocols and procedures, and status reports.

A NIC transcription service is already partially operational and transcribing these documents into the NIC.

A preliminary version of the Typewriter Oriented Document Aid System (TODAS), is now in use by the transcription service, operating in the off-line mode only.

Quite early, about the 2nd quarter of 1969, the collection will be made available to the users in microfilm form. At that time a NIC system, called Graphics-Oriented Document Output System (GODOS) will enable computer-held information at the NIC to be recorded onto microfilm via a CRT.

During the third quarter of 1969 an on-line version of TODAS should be implemented to permit users with Teletype machines on the dialup telephone network to call into the NIC and execute a limited search system.

During the last quarter of 1969 the on-line version of TODAS with text-manipulation capabilities should be available.

Present Collection

The present NIC collection contains (in softcopy form) all or portions of the following documents:

Half-Tone Perspective Drawings by Computer.

C. Wylie, G. Romney, D. C. Evans, A. Erdahl, (UTAH)

14 November 67, Revised 12 February 68.

A FORTRAN V Interactive Graphical System.

A. C. Reed, D. E. Dallin, S. T. Bennion, (UTAH)

3 April 68.

GS - Graphics System

L. Copeland and C. S. Carr (UTAH)

November 15, 1967,

Illiac IV -- Systems Characteristics and Programming Manual

Burroughs Corporation (UI)

1 March 1968, Change 1, 12 June 1968

Procedures and Standards For Inter-computer Communications

A. K. Bhushan and R. H. Stotz (MIT)

Reprinted from AFIPS Conference Proceedings, Volume 32, 1968

Specifications of Interface Message Processors for the ARPA Computer Network (Statement of Work Annex "b")

Advanced Research Projects Agency (ARPA)

July 29 1968

U.C.S.B. On-Line System Manual

University of California, Santa Barbara (UCSB)

October 1, 1967

A Study of Computer Network Design Parameters

E. B. Shapiro, (SRI)

December 1968

NIC Newsletter

NIC Staff (SRI)

Jan. 16, 1969

Network Newsletter

NIC Staff (SRI)

Jan. 6, 1969

Figure 1: INFORMATION FLOW IN AND OUT OF THE NIC

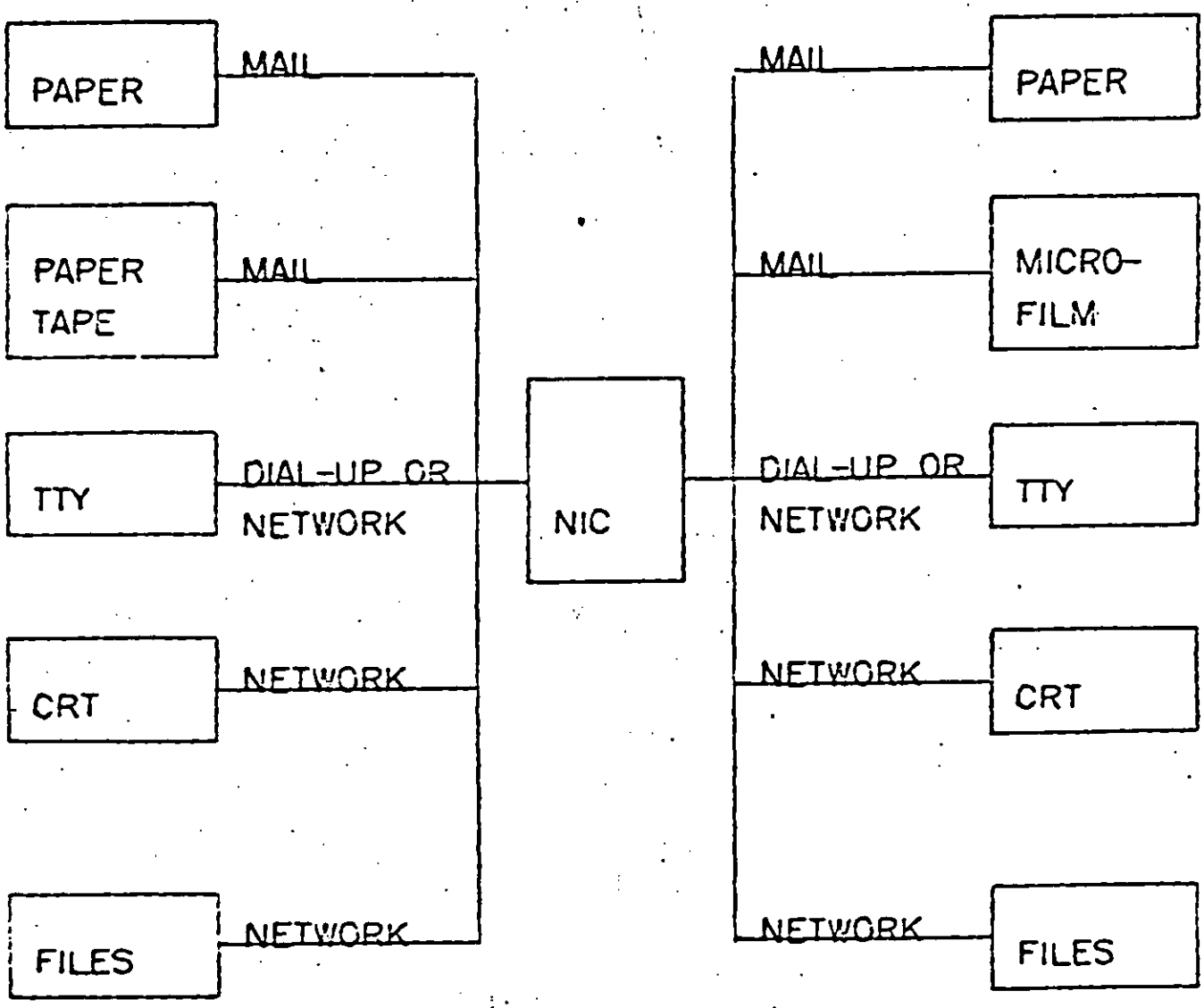

Item 8

ADVANCED RESEARCH PROJECTS AGENCY
Washington, D.C. 20301

Program Plan No. 723

Date: 3 June 1968

Program Title: RESOURCE SHARING COMPUTER NETWORKS

Type of Contractor: To be selected from 4 - Industry (Profit)

Project from which Funded: Information Processing Techniques (8D30)

Prepared by: _____
Lawrence G. Roberts
Program Manager

Concurred in: _____
Robert W. Taylor, Director for
Information Processing Techniques

Approved by: _____
Director, ARPA

Date: _____

Type of Work: B (Applied Research)

Field of Work: 77 (Computer Sciences)

ADVANCED RESEARCH PROJECTS AGENCY
Washington, D.C. 20301

Program Plan No. 723

Date: 3 June 1968

RESOURCE SHARING COMPUTER NETWORKS

A. Objective of the Program.

The objective of this program is twofold: (1) To develop techniques and obtain experience on interconnecting computers in such a way that a very broad class of interactions are possible, and (2) To improve and increase computer research productivity through resource sharing. By establishing a network tying IPT's research centers together, both goals are achieved. In fact, the most efficient way to develop the techniques needed for an effective network is by involving the research talent at these centers in prototype activity.

Just as time-shared computer systems have permitted groups of hundreds of individual users to share hardware and software resources with one another, networks connecting dozens of such systems will permit resource sharing between thousands of users. Each system, by virtue of being time-shared, can offer any of its services to another computer system on demand. The most important criterion for the type of network interconnection desired is that any user or program on any of the networked computers can utilize any program or subsystem available on any other computer without having to modify the remote program.

B. Technical Need and Background of the Program.

1. Scientific Environment.

Currently there are thousands of computer centers in the country, each of which operates almost completely autonomously. There is some trading of programs between those machines which are sufficiently similar to allow this, and there is technical communication through publications of technical meetings describing techniques developed. However, since the computer field is growing at such a rapid rate, a more immediate mechanism must be developed if there is to be significant cross-fertilization in sharing between these many centers. Although the same problem exists in many technological areas, the solution is most easily found and implemented by the computer community. If a sufficiently reliable and

are using various machines with varying degrees of success. It is not unusual to find a greater continuity of community interest within, say, logistic commands of the Army, Navy and Air Force than that which exists across, say, one Air Force staff. With the current fractionation of computer resources in the absence of any technology permitting the interconnection and sharing of these resources, the current situation can only get worse. Military personnel trained to use one manufacturer's equipment must often be trained again to use a different manufacturer's equipment as the personnel move from one military station to another. Machines procured from different manufacturers require as many different user training programs as there are machines thus inhibiting positive transfer of training that could accumulate through the rotation of military personnel. Those data files and programs which have common utility to many military organizations and installations must be stored, created and maintained separately at each different machine. Military systems interconnected in a distributed interactive network obviate such constraints.

3. Previous Work.

Relatively little work has been done in the past on interactive computer networks and it is mainly with the advent of widespread time-sharing that such nets become feasible. Most previous work has concentrated on either load sharing or message handling goals. In 1963 ARPA initiated a project at UCLA to develop a network linking computers in the Western Data Processing Center. This work was aimed at enabling several similar computers to load-share between themselves over high data rate links. However, it was soon found that load-sharing introduces considerably more problems than it solves and the project was terminated. A similar experiment at Bell Labs has also demonstrated the infeasibility of load-sharing. Here, the project achieved reasonable success for several years before small discrepancies in the library routines at each location killed the effort.

Networks for message handling have been considerably more successful as demonstrated by the Westinghouse inventory control system and the airlines reservations networks, but the techniques utilized are special purpose and are not transferable into general intercomputer communication.

More recently, experiments have been carried out between Lincoln Laboratory and System Development Corporation to test the feasibility of more general computer-computer interaction. This experiment

In December 1967, a small contract (AO 1137) was initiated with Stanford Research Institute for the development of specifications for the necessary communications system. This effort has resulted in sufficiently detailed documentation to allow a request for bids on Interface Message Processors (IMPs). SRI will also provide continuing assistance to the initial participants in the network.

2. Network Information Center

In order for people to utilize the envisioned computer network effectively, it will be necessary to provide extremely good documentation on what programs and files are available throughout the net. This information should be available on-line to any individual in the network. It should be possible for him to add new program descriptions, edit previous descriptions, retrieve relevant information based on kevword searches and affix comments to program descriptions which he has used. To achieve this goal, Stanford Research Institute has been tasked with developing such a facility. This is an extension of the capability already achieved at SRI and is in progress in order that it may become available concurrently with the network.

3. Communication System

Multi-point, fast response, high capacity, reliable communications are required for an interactive computer network. The traffic between nodes is expected to consist mainly of short digital messages with a wide dispersal of destinations. Initially, message length will vary from one to one thousand characters with an expected average length of 20 characters. Since a cross country 50 kb communication line has a delay equivalent to 150 characters, messages must be continuously multiplexed into each line in order to maintain reasonable efficiency. Since the dispersion of destinations is large, messages with different origins and destinations must be concentrated into the same line. This can only be achieved with a store and forward system.

Message delay for on-line, interactive work should be well below one second (origin to destination). This cannot be achieved with voice grade communication lines in a store and forward system. However, with 50 kilobit communication lines, the required response speed can be attained. The additional capabity obtained with 50 kb lines is also important, but is not the prime factor dictating the choice of these lines.

After considering the trade-offs associated with the communications subsystem, it was decided to design and build a store and forward net

becomes available, users will begin to experiment with remote languages and systems. Some activities have already been identified and interest will grow rapidly once reliable communications have been established. Researchers often transfer between the various projects and then must reprogram certain basic systems at the new center. With the network, these needs will be eliminated since the researcher may use his original program through the net.

5. Cost Estimates.

The interactive network costs fall into two categories: (1) The communications and Interface Message Processor costs, and (2) Costs of communication and resource sharing experiments. The majority of this second class of costs will be borne by each of the computer research contracts now extant. They will vary across a range of extremes bounded by, for example, a single researcher's small experimental program and a group of researchers concerned with studies of on-line documentation. The communications and Interface Message Processor costs are more easily identifiable. The table below shows the commitment requirements.

Year	Costs		
	Communication Line	IMP Contractor	Total
FY 68	0	563K	563K
FY 69	25K	1000K	1025K
FY 70	680K	200K	880K
FY 71	900K	100K	1000K

E. Transfer

The transfer of interactive computer network technology will occur in three forms: (1) Dissemination of techniques and experimental results through the open scientific and technical literature, (2) Through the common carriers or other commercial organizations concerned with data transfer and dissemination, and (3) Through the military command and control centers for which the National Military Command System Support Center in the Pentagon serves as the focal point.

1. Publication of Results.

Dissemination of new scientific and technical knowledge through conferences and the appropriate literature is a slow but

Military Command System Support Center. This is the primary computer organization serving the Joint Chiefs of Staff and operates under the management of the Defense Communications Agency. Its computer capability serves also as the fountainhead for military command and control centers around the world. IPT has paid for the development of a prototype time-sharing system to be tested in the NMCSSC over the next 12 months. As a result of these test findings, it is expected that the NMCSSC will move away from conventional batch processing and into the computer technology created by ARPA and its contractors. As it does so, other military centers affiliated with it will follow, e.g. CINCPAC, CINCEUR and MACV. Such a collection of affiliated military centers using computer technology represented by ADEPT-TDMS provides a natural recepient for an interactive computer network. Transfer will be facilitated by SDC's (creator of ADEPT-TDMS) participation in the ARPA experimental network. The ability of military command systems to be able to interactively call upon one another through a distributed net will be particularly important due to their joint responsibility and common data base interests.

Item 9

ADVANCED RESEARCH PROJECTS AGENCY
Washington, D. C. 20301

June 21, 1968

MEMORANDUM FOR THE DIRECTOR, PROGRAM MANAGEMENT

SUBJECT: Interactive Computer Network Communication System

The purpose of this memorandum is to request an ARPA order be written to ARO-Durham for $563 K to initiate a contract for the design, construction, installation, test and maintenance of interface message processors (IMPs) to form a communication system to support the ARPA network activities. The contractor is to be selected by competition between selected bidders.

APP No. 723, submitted with this memorandum, describes the requirements for a network and the need for a distributed store and forward communications system. A detailed specification has been written to permit potential contractors to bid on providing the IMPs. This bid will be for total system responsibility. Bidders who are not computer manufacturers must therefore negotiate with a manufacturer on the price and delivery of the hardware which they select. The initial contract will request the design, production, delivery, test, and evaluation of four IMPs. The initial installations will be at Stanford Research Institute; U.C., Santa Barbara; UCLA; and the University of Utah.

The development of this distributed communication system will not only provide the communications capability required for the ARPA computer research facilities, but will also be a unique prototype of future communication systems. Additionally, this network will provide an opportunity to demonstrate a form of communications organization recommended in a distributed digital network study by the RAND Corporation.

Administrative Considerations

The $563 K should provide sufficient funds for the IMP design, the purchase of four IMPs and their installation at the initial nodes. A small network which will be created between these four nodes will be used mainly to evaluate the performance of the store and forward communication system. If the basic design proves satisfactory, the extension of the network to include additional nodes will be considered. Fiscal 1969 funds have been programmed for this purpose.

Transfer Plan

It is anticipated that the communication system being developed will be attractive to the common carriers as a potential data service. After four nodes of the network can be demonstrated, a common carrier will be asked to make an economic evaluation addressing the desirability of offering such communications as a service. When the entire net is established and operating smoothly, the carrier may be requested to manage the net, thus directly providing digital message transmission as a tariffed service. This will be particularly desirable when the computer network is sufficiently developed to include more research centers such as the NSF supported activities.

Reporting Requirements

Quarterly progress reports, and final reports covering entire design and evaluation at the end of the initial contract.

Contractor Selection

To be selected through competitive evaluation by a panel of ARO-Durham and ARPA personnel.

Agent and Level of Support

ARO-Durham personnel have been involved in the preparation of the specification. Technical support will be requested of ARO-Durham; however, the project responsibilities should remain with ARPA.

[SIGNED

Lawrence G. Roberts
Special Assistant for
Information Sciences

Enclosure
APP 723

AMENDMENT/MODIFICATION NO.	2. EFFECTIVE DATE	3. REQUISITION/PURCHASE REQUEST NO.	4. PROJECT NO. (If applicable)
P00019	3APR01	1001/28 and 101[illegible] 20/4 AO #1260	

5. ISSUED BY CODE A74880

DEFENSE SUPPLY SERVICE-WASHINGTON
Room 1D 245, The Pentagon
Washington, D. C. 20310

6. ADMINISTERED BY (If other than block 5) CODE S2202A

DCASR, Boston
666 Summer Street
Boston, Massachusetts 02210

NONE
B

7. CONTRACTOR NAME AND ADDRESS CODE 26970 FACILITY CODE

Bolt, Beranek, and Newman, Inc.
50 Moulton Street
Cambridge, Massachusetts 02138

8. [ ] AMEND. SOLICIT. Item 10 DATED

[X] MODIFICATION OF CONTRACT/ORDER NO. DAHC15 69 C 0179

DATED 69 Jan 02 (See block 11)

THIS BLOCK APPLIES ONLY TO AMENDMENTS OF SOLICITATIONS

[ ] The above numbered solicitation is amended as set forth in block 12. The hour and date specified for receipt of Offers [ ] is extended, [ ] is not extended.

Offerors must acknowledge receipt of this amendment prior to the hour and date specified in the solicitation, or as amended, by one of the following methods: (a) By signing and returning _____ copies of this amendment; (b) By acknowledging receipt of this amendment on each copy of the offer submitted; or (c) By separate letter or telegram which includes a reference to the solicitation and amendment numbers. FAILURE OF YOUR ACKOWLEDGMENT TO BE RECEIVED AT THE ISSUING OFFICE PRIOR TO THE HOUR AND DATE SPECIFIED MAY RESULT IN REJECTION OF YOUR OFFER. If, by virtue of this amendment you desire to change an offer already submitted, such change may be made by telegram or letter, provided such telegram or letter makes reference to the solicitation and this amendment, and is received prior to the opening hour and date specified.

ACCOUNTING AND APPROPRIATION DATA (If required)

See Attachment M3, Annex C

FILE RCA

THIS BLOCK APPLIES ONLY TO MODIFICATIONS OF CONTRACTS/ORDERS

a) [ ] This Change Order is issued pursuant to _____

The Changes set forth in block 12 are made to the above numbered contract/order.

b) [ ] The above numbered contract/order is modified to reflect the administrative changes (such as changes in paying office, appropriation data, etc.) set forth in block 12.

c) [XX] This Supplemental Agreement is entered into pursuant to authority of 10 U.S.C. 2304(a)(11)

It modifies the above numbered contract as set forth in block 12.

DESCRIPTION OF AMENDMENT/MODIFICATION

WHEREAS, the Contractor and the Government entered into Contract No. DAHC15 69 C 0179 under date of 2 January 1969 which, together with any and all amendments, changes, modifications and supplements thereto, is hereinafter referred to as "the contract", and

WHEREAS, the parties hereto have mutually agreed to the estimated cost and fixed fee for the changes arising under Modification P00015 (Change Order), Option M, Revision 1, and Option N, Revision 2, of Contractor's proposal P72-FY-1B, and

WHEREAS, the parties hereto do mutually agree to extend the contract;

NOW, THEREFORE, in consideration of the mutual covenants and agreements herein contained and for other good and valuable consideration, the parties hereto do mutually agree to amend said contract as follows:

The Contract is hereby revised and restated in its entirety as follows:

Except as provided herein, all terms and conditions of the document referenced in block 8, as heretofore changed, remain unchanged and in full force and effect.

[ ] CONTRACTOR/OFFEROR IS NOT REQUIRED TO SIGN THIS DOCUMENT [X] CONTRACTOR/OFFEROR IS REQUIRED TO SIGN THIS DOCUMENT AND RETURN 6 COPIES TO ISSUING OFFICE

15A. NAME OF CONTRACTOR/OFFEROR (Signature of person authorized to sign)		17. UNITED STATES OF AMERICA BY (Signature of Contracting Officer)	
15B. NAME AND TITLE OF SIGNER (Type or print)	16. DATE SIGNED	18. NAME OF CONTRACTING OFFICER (Type or print)	19. DATE SIGNED

01-01

Program Mgmt

:CTION B. CONTRACT FORM AND REPRESENTATIONS, CERTIFICATIONS AND OTHER STATEMENTS OF OFFEROR.

·1. DISCLOSURE STATEMENT-COST ACCOUNTING PRACTICES AND CERTIFICATION.

Any contract in excess of $100,000 resulting from this solicitation, ·cept when the price negotiated is based on: (1) established catalog or ·rket prices of commercial items sold in substantial quantities to the ·neral public, or (2) prices set by law or regulation, shall be subject · the requirements of the Cost Accounting Standards Board. Any offeror bmitting a proposal, which, if accepted, will result in a contract sub- ·ct to the requirements of the Cost Accounting Standards Board must, as condition of contracting, submit a Disclosure Statement as required by ·gulation of the Board. The Disclosure Statement must be submitted as a rt of the offeror's proposal under this solicitation (see (1) below) unless .) the offeror, together with all divisions, subsidiaries, and affiliates der common control, did not receive net awards of negotiated defense prime ntracts during the period 1 July 1970 through 30 June 1971 totaling more an $30,000,000 (see (2) below), (ii) the offeror has already submitted a .sclosure Statement disclosing the practices used in connection with the icing of this proposal (see (3) below), or (iii) post-award submission has en authorized by the Contracting Officer. CAUTION: A practice disclosed a Disclosure Statement shall not, by virtue of such disclosure, be deemed be a proper, approved, or agreed to practice for pricing proposals or cumulating and reporting contract performance cost data.

eck the appropriate box below:

) 1. CERTIFICATE OF CONCURRENT SUBMISSION OF DISCLOSURE STATEMENT(S)

The offeror hereby certifies that he has submitted, as a part of his ·oposal under this solicitation, cipies of the Disclosure Statement(s) as llows: (i) original and one copy to the cognizant Administrative Contract- .g Officer (ACO) (see DoD Directory of Contract Administration Components)oD 4105.59H); (ii) one copy to the cognizant contract auditor; and (iii) .e copy to the Cost Accounting Standards Board, 441 G Street, N. W., .shington, D. C. 20548.

Date of sclosure Statement(s)	Name(s) and Address(es) of Cognizant ACO(s) Where Filed

The offeror further certifies that practices used in estimating costs . pricing this proposal are consistent with the cost accounting practices .sclosed in the Disclosure Statement(s).

) 2. CERTIFICATE OF MONETARY EXEMPTION

The offeror hereby certifies that, together with all divisions, sub- diaries, and affiliates under common control, he did not receive net awards ; negotiated national defense prime contracts during 1 July 1970 through , June 1971 totaling more than $30,000,000.

) 3. CERTIFICATE OF PREVIOUSLY SUBMITTED DISCLOSURE STATEMENT(S)

The offeror hereby certifies that the Disclosure Statement(s) were iled as follows:

Date of isclosure Statement(s)	Name(s) and Address(es) of Cognizant ACO(s) Where Filed

The offeror further certifies that practices used in estimating costs n pricing this proposal are consistent with the cost accounting practices isclosed in the Disclosure Statement(s).

ECTION E. SUPPLIES/SERVICES AND PRICES.

tem	Supplies or Services	Total Estimated Cost
001	Research and development for the Defense Advanced Research Projects Agency Computer Network	
	Estimated Cost	$7,034,987.00
	Fixed Fee	601,953.00
	Total Cost Plus Fixed Fee	$7,636,940.00
	ACRN - 1A,B,C,D,E,F,G,H,I,J,K,L,M,N,P,Q,R.	
)02	Research and development for the Defense Communications Agency Computer Network	
	Estimated Cost	$ 337,835.00
	Fixed Fee	28,919.00
	Total Cost Plus Fixed Fee	$ 366,754.00
	ACRN: 2A, B.	

ECTION F. DESCRITPION/SPECIFICATIONS.

-1. Scope of Work.

a. Unless otherwise provided herein, the Contractor with due diligence hall furnish all necessary qualified personnel, material and equipment, anaging and directing the same, to complete the work described in Annex "A" nd revisions thereto entitled "Statement of Work: Specifications of Interace Message Processors for the ARPA Computer Network" and Exhibits 1 and 2 ereof, in accordance with his proposals listed in Annex "D", Contractor's roposals, which listed proposals by this reference, are specifically made a art of this contract and are on file in the office of the Contracting Officer.

b. As a part of the work to be performed the Contractor shall furnish eports for Items 0001 and 0002 as follows:

0001 - Quarterly Management Reports
Milestone Reports
Quarterly Technical Reports
Final Technical Report

eports for Item 0001 shall be rendered in accordance with Annex "B", Requireents for ARPA Sponsored Contracts.

0002 - Quarterly Management Reports.
Final Technical Report

eports for Item 0002 shall be rendered in accordance with Exhibit 0002, eports Requirements and Delivery Schedule for DCA IMP Network, which by his reference is specifically made a part of the contract.

c. The reports required by contract and the deliverable data set forth sewhere in the contract are data to be delivered in accordance with the lause entitled "Rights in Technical Data" of the General Provisions.

ECTION H. DELIVERY SCHEDULE.

0001 - The funded period of performance for this item ends 18 June 974. Individual deliverables shall be made in accordance with Exhibit 1, elivery Schedule for the ARPA Computer Network.

0002 - The funded period of performance for this item ends 14 March 974. Individual deliverables shall be made in accordance with Exhibit 0002, eports Requirements and Delivery Schedule for DCA Computer Network.

ECTION J. SPECIAL PROVISIONS.

-1. Project Officer. The Contracting Officer may designate Contracting fficer' Technical Representatives to:

a. Act as Project Officer under this contract. the Project Officer will eceive for the Government, reports and other materials called for in this con- ract and will represent the Contracting Officer in the technical phases of the ork. The Project Officer is not authorized to change any of the terms and onditions of this contract. Changes in the scope of work will be made only by he Contracting Officer by properly signed written modifications to the contrac uch representatives as may be appointed will be specifically designated in a etter from the Contracting Officer to the Contractor.

-2. Allowable Costs. It is understood and agreed that, subject to the pro- isions of the clause entitled "Allowable Cost, Fixed Fee and Payment" of the eneral Provisions the following shall be considered as allowable items of cost nder the contract when incurred or paid by the Contractor and when necessary nd required and used for the performance of the work hereunder; (this Article oes not preclude the allowance of other costs allowable under Armed Services rocurement Regulation, Section XV):

a. Salaries and Wages. Expenditures by the Contractor for salaries and ages of his personnel and borrowed personnel directly engaged in the perform- nce of work hereunder; and properly allocable to this contract including ederal and State taxes paid by the Contractor and properly allocable to such alaries and wages.

b. Travel and Subsistence. Travel and subsistence expenses shall be aid in accordance with the Contractor's approved travel policy. The differenc n cost between first-class air accommodations and less than first-class air ccommodations is unallowable except when less than first-class accommodations re not reasonably available to meet mission requirements. Reasonableness hall be ascertained by a review of all facts pertaining to the specific costs y the Contracting Officer. Should transportation and subsistence expenses be ncurred concurrently in connection with the performance of more than one con- ract, such expenditures shall be allocated on an equitable basis to the con- racts involved, such allocation to be based on a review of all pertinent facts oncerned with the particular trip.

c. Materials and Supplies. Expenditures by the Contractor for such aterials, supplies, apparatus, equipment, and other articles (including rental f apparatus and equipment) properly allocable to performance of the work here- nder.

d. Indirect Costs. Except as to the incurrence of subcontract costs ith Honeywell Incorporated and Telecomp, indirect costs shall be reimbursed n an actual cost basis in accordance with Section XV, of the Armed Services rocurement Regulation. Subject to final establishment by cognizant Govern- ent auditors of actual indirect costs incurred, such costs shall be reimbursec n a provisional basis through means of a billing rate acceptable to the ontracting Officer. In connection with the incurrence of subcontract costs ith Honeywell, Inc., the indirect costs incurred by the Contractor shall not

be reimbursed at a rate exceeding five percent (5%) of such costs, and there will be no reimbursement of indirect costs, if any, incurred in connection with the Telecomp subcontract.

e. Reproduction Costs. Costs for "duplicating" as defined in Printing and Binding Regulations published by the Joint Committee on Printing of the Congress of the United States, December 01, 1972, No. 22. Allowable reproduction and duplicating usually includes that produced from stencils, masters and mats used on a single unit duplicating equipment not larger than 11 by 17 inches with a maximum image of 10-3/4 by 14 inches, provided that reusable contact negatives and/or positives prepared with a camera requiring a darkroom are not used; and provided further, that not more than 225 copies are reproduced.

J.3. Contractor Acquired Property. Subject to the approval of the Contracting Officer, the Contractor may acquire or fabricate special test equipment as set forth in his proposals listed in Annex "D" in amount not to exceed the sum of Three million five hundred four thousand six hundred seventy-nine dollars ($3,504,679.00). Costs incurred therefor will be allowable costs, provided that the Contractor shall have no obligation to acquire or fabricate special test equipment in excess of the total estimated equipment costs set forth herein, unless this contract is amended to increase such amount. The special test equipment so acquired or fabricated shall be considered Government Property and shall be subject to the provisions of the clause entitled "Government Property (Cost Reimbursement)" of the General Provisions.

J-4. Government Furnished Equipment. In connection with the performance of this contract the Government shall furnish to the Contractor all telephone lines and telephone modems.

J-5. Rated Contract.

This contract is certified for National Defense under BDSA Regulation 2 or DNS Regulation 1 and is rated DO-A7.

SECTION K. CONTRACT ADMINISTRATION DATA.

K-1. Vouchers, identified by contract number, with supporting statements, shall be submitted to the audit agency shown below for review and provisional approval:

Defense Contract Audit Agency
Northeast Branch Office
424 Trapelo Road
Waltham, Massachusetts 02154

CTION L. GENERAL PROVISIONS.

e Armed Services Procurement Regulation Clauses listed below are hereby corporated in this contract by reference with the same force and effect if set forth in full. The full text of each clause is as published in the 69 Edition of the Armed Services Procurement Regulation, through Revision 11, d applicable Defense Procurement Circulars through No. 107, dated 11 December 72.

AUSE TITLE AND DATE	ASPR REFERENCE
finitions (62 Feb)	7-103.1
mitation of Cost (66 Oct)	7-402.2(a)
lowable Cost, Fixed Fee and Payment (72 Jan)	7-203.4(a)
andards of Work (59 Feb)	7-402.4
spection (59 Feb)	7-402.5(b)
signment of Claims (62 Feb)	7-103.8
amination of Records by Comptroller General (71 Mar)	7-104.15
bcontracts (72 Apr)	7-402.8(a)
ilization of Small Business Concerns (59 Jun)	7-104.14(a)
rmination (71 Nov)	7-203.10
sputes (58 Jan)	7-103.12(a)
negotiation (59 Oct)	7-103.13(a)
y American Act (64 Oct)	7-104.3
nvict Labor (49 Mar)	7-104.17
lsh-Healey Public Contracts Act (58 Jan)	7-103.17
ntract Work Hours and Safety Standards Act-Overtime Compensation (69 Nov)	7-103.16
ual Opportunity (71 Apr)	7-103.18
ficials Not to Benefit (49 Jul)	7-103.19
venant Against Contingent Fees (58 Jan)	7-103.20
thorization and Consent (61 Jan)	7-302.21
tice and Assistance Regarding Patent and Copyright Infringement (65 Jan)	7-103.23
tent Rights (License) (69 Dec)	7-302.23(b)
ghts in Technical Data (72 Apr)	7-104.9(a)
vernment Property (Cost Reimbursement) (70 Sep)	7-203.21
surance-Liability to Third Persons (66 Dec)	7-203.22
ilization of Labor Surplus Area Concerns (70 Jun)	7-104.20(a)
yment for Overtime Premiums (67 Jun)(Insert "0" in blank)	7-203.27
mpetition in Subcontracting (62 Apr)	7-104.40
dit by Department of Defense (71 Apr)	7-104.21(a)
anges (67 Apr)	7-104.1
chnical Data - Withholding of Payment (72 Apr)	7-204.9(b)
bcontractor Cost and Pricing Data (70 Jan)	7-104.42(a)
ilization of Minority Business Enterprises (71 Nov)	7-104.36(a)
cusable Delays (69 Aug)	7-203.11
atuities (52 Mar)	7-104.16
mitation on Withholding of Payments (59 Feb)	7-403.12(a)
terest (72 May)	7-104.39
sting of Employment Openings for Veterans (71 Nov)	7-103.27

LAUSE TITLE AND DATE	ASPR REFERENCE
rder of Precedence (65 Aug)	7-104.56
top Work Order (71 Apr) 7-105.3(c) as modified by	7-205.6
eports of Work (60 Jul)	7-404.6
qual Opportunity Pre-Award Clearance of Subcontracts (71 Oct)	7-104.22
iling of Patent Applications (69 Dec)	7-104.6
itle and Risk of Loss (68 Jun)	7-103.6
rice Reduction for Defective Cost or Pricing Data (70 Jan)	7-104.29(a)
riorities, Allocations and Allotments (71 Apr)	7-104.18
aterial Inspection and Receiving Report (69 Dec)	7-104.62
ost Accounting Standards (72 Jul)	7-104.83

ECTION M. LIST OF DOCUMENTS, EXHIBITS AND ATTACHMENTS.

-1. Annex "A", Statement of Work; Specifications of Interface Message Processors for the ARPA Computer Network.

-2. Annex "B", Requirements for ARPA Sponsored Contracts.

-3. Annex "C", Accounting and Appropriation Data.

-4. Annex "D", Contractor's Proposals.

-5. Exhibit 1, Delivery Schedule for Item 0001.

-6. Exhibit 2, Delivery Schedule and Reporting Requirements for Item 0002.

S T A T E M E N T O F W O R K

ANNEX "A"

Sponsoring Agency:

Advanced Research Projects Agency (ARPA)
Washington, D. C. 20301

SPECIFICATIONS OF

INTERFACE MESSAGE PROCESSORS

FOR THE ARPA COMPUTER NETWORK

TABLE OF CONTENTS

	Page
I. Network Description	1
A. Introduction	1
B. Functional Description	2
1. The User Subnet	2
2. The Communication Subnet	2
C. Functional Description of the IMPS	6
1. Breaking of Messages into Packets	7
2. Management of Message Buffers	7
3. Routing of Messages	7
4. Generation, Analysis and Alteration of Formatted Messages	8
5. Coordination of Activities with other IMPS	8
6. Coordination of Activities with its HOST(s)	8
7. Measurement of Network Parameters and Functions	9
8. Detection and Disposition of Faults	10
9. IMP Software Separation Protection	11
D. The HOST-IMP Interfaces	11
E. The IMP-CARRIER Interfaces	12
F. Network Performance Characteristics	13
1. Message Delay	13
2. Reliability	14
3. Network Capacity	14
4. Network Model	14
G. HOST-HOST Characteristics	15
H. IMP-Operator Interface	16
II. Network Contractor Performance	16
III. Elements of System Design	18
Appendix	
A. ARPA Network	20
B. ARPA Network Topology	21
C. IMP Delivery Schedule	22
D. Input and Output Facilities for the IMP Operator	23
E. ARPA Network Data Rates Between Nodes in Kilobits/sec.	24
F. Data Communications Conventions	25
G. Routing	31

SPECIFICATIONS OF
INTERFACE MESSAGE PROCESSORS
FOR THE ARPA COMPUTER NETWORK

I. Network Description

A. Introduction

The Advanced Research Projects Agency, with the cooperation of its research contractors, is forming a computer communication network. By the distinctive nature of these contractors, this will be a highly inhomogeneous network. There will be many kinds of computers involved and even in those cases where two contractors possess similar equipment, their operating systems and types of utilization will differ. On the other hand, this will be a network of important potential precisely due to making these advanced research computer systems available to users outside their own design circle. System variety is of utmost importance; any present similarity is to be considered a happenstance of equipment availability and must not be an issue of network design. Each system is oriented to the specialized research of the contractor and after connection to the network, will continue to operate primarily as a stand-alone system for that contractor's use. Each contractor will make some part of his facility frequently available to the network; however, network operation must not depend upon any single contractor's machine. (Hereafter a contractor's computer is called a HOST.)

To effect graceful disconnection of a HOST from the network and to guard against burdening connected HOSTS with network responsibilities, a communication subnet shall be constructed consisting of store-and-forward computers (called IMPS or interface message processors) located at contractor sites. Each IMP shall be connected to several other IMPS by full duplex 50 kbps common carrier communication links creating a strongly interconnected net. Typically, there will be three or four full duplex lines at each site that can serve to benefit routing and network buffering. A list of the projected network nodes and an illustrative interconnection graph is shown in appendices A and B.

In addition to serving the research interests of the ARPA contractors, the network itself is a subject of study and experimentation; for this reason, data gathering facilities are incorporated into the network and must be considered an integral part of the hardware and software design of the communication subnet. The use of these facilities will provide a basis for evolution of the network design.

B. Functional Description of the Network

For the purpose of delineating areas of responsibility and specifying design requirements the network is subdivided into the following components:

1. The USER SUBNET

   a. The HOST systems:

      The contractors hardware and software prior to or independent of the formation or construction of the network.

      The contractors own hardware and software individually designed and implemented for his own convenience in attaching himself to the network.

      The contractors own hardware and software specifically oriented to his utilization of some other HOST system within the network.

2. The COMMUNICATION SUBNET

   a. The CARRIER systems:

      The common carrier facilities available by contract prior to or independent of the formation of the network.

      The circuit switches, leased lines, data sets, and line conditioning equipment utilized by the network.

   b. The IMP systems:

      The store-and-forward message processors dedicated to the service of the network.

      The hardware interfaces attaching the message processors to the data sets of the CARRIER.

      The procedures, hardware and software, for message transmission, validation, failure detection, recovery, and data gathering. In general,

those processes comprising the communication design and performance of the message processors which maintain at all network sites (hereafter called the CARRIER side of the IMP).

The hardware interfaces attaching the message processors to the local HOST(s).

The procedures, hardware and software, for message reformatting either sending or receiving and as specifically required for the local HOST, (hereafter called the HOST side of the IMP).

To visulize the operation of the network, consider the following examples of expected interactions.

Example 1. Documentation activities using the S.R.I. HOST system.

The HOST at Stanford Research Institute will maintain a network library of documentation information. Some of this information is private to S.R.I., some is available to all network users, some is available to particular network users. The S.R.I. systems for handling such information on-line is to be made available to the network users. The on-line controls coming from an S.R.I. console specify precisely the program control of the documentation system. Consequently, the outputs generated by any console in the network can be mapped into the set of S.R.I. console outputs by a reformatting program in the user's HOST and thus effect controls of the S.R.I. system. In the other direction, the display output to an S.R.I. console uniquely specifies the visible results of applying the above controls. Consequently, the data stream from the computer to the display system can be mapped into the output data stream required to similarly display such visible results at the user' site. This would also be handled by a reformatting program in the users' HOST.

In general, there is room for many different selections of how and where to programmatically connect two HOST sites, the above is only intended as an example. We could just as well elect to transport the S.R.I. document to the user' HOST and reformat this document to a form acceptable by the HOST System and then apply HOST display (or line printer) programs to the resulting document.

Example 2. Network studies using the UCLA HOST system.

The HOST system at UCLA will include analysis programs for studying network performance. The design of the IMPS will include facilities for gathering network data when requested and reporting this data to other sites. A user at an arbitrary contractor site may schedule and run network experiments by supplying program controls to the UCLA HOST system to effect the selection of data gathered and to govern its analysis of the UCLA HOST system. Or, the user may elect to have the raw data sent to him directly for processing by his own programs. To avoid conflicts, such experiments will normally be scheduled and monitored by the UCLA HOST.

Example 3. Extended console operation in the network.

Since many sites have unique facilities, we can expect rich interaction to accur, as it is only necessary to develop INTERCONNECTION SOFTWARE in order to have utilization of the power of another contractor's system. From the point of view of the ARPA contractors as users of the network, the communication subnet is a self-contained facility whose software and hardware is maintained by the network contractor. In designing INTERCONNECTION SOFTWARE we should only need to use the I/O conventions for moving data into and out of the subnet and not otherwise be involved in the details of subnet operation. Specifically, error checking fault detection, message switching, fault recovery, line switching, carrier failures and carrier quality assessment, as required to guarantee reliable network performance, are the sole responsibility of the network contractor. However, during the period of design and construction of the network, the user contractors can provide aid to the network contractor as suggested in Section IV B below.

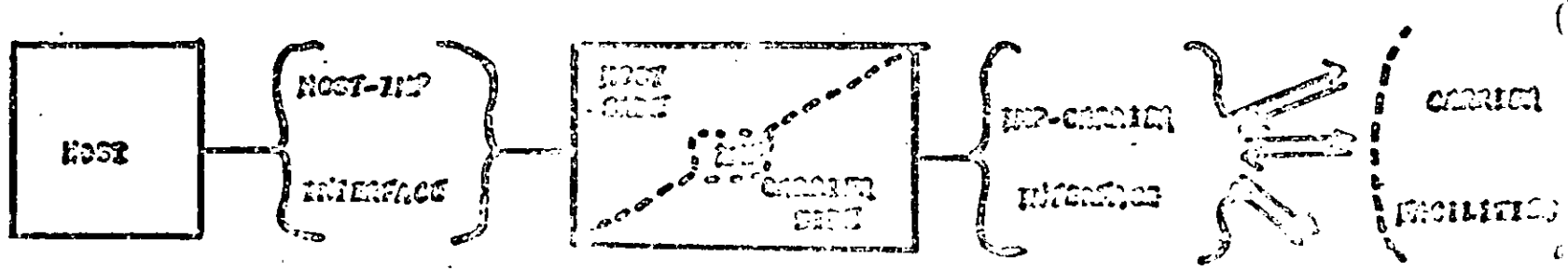

Connection of Host to Carrier Facilities through

Interface Message Processor.

C. Functional Description of the IMPS.

The set of IMPS is to serve as the interface between the set of HOSTS and the CARRIER network. Each transmitting HOST looks into the network through its adjacent IMP and sees itself connected to the receiving HOST (which responds to requests from the transmitting HOST after a delay due to IMP and CARRIER congestion as well as its own congestion). Each receiving HOST sees the network through its adjacent IMP and responds to incoming data as from a set of remote terminals making requests. The network sees a set of IMPS providing and accepting message traffic. Each IMP sees the network as a source of messages for its receiving HOST, and as a sink for messages from its transmitting HOST and from messages using it as a relay IMP. The IMP, as part of its basic function must smooth out severe fluctuations in the message traffic by providing temporary message buffering.

Thus, the IMP is to provide store-and-forward switching for messages exchanged between the HOST computers. It is to receive messages from its attached HOST(s) and from other IMPS connected to it by means of communication circuits. These messages, or packets or messages, are to be forwarded, as appropriate, to the other connected IMPS or to its attached HOST(s). In the execution of these functions the IMP is to observe the IMP-IMP communication protocol and the HOST-IMP communication protocol, as established by ARPA. A tentative version of the protocol is provided in Appendix F. These activities of the IMP involve the following functions:

(1) Breaking messages into packets

(2) Management of message buffers

(3) Routing of messages

(4) Generation, analysis, and alteration of formatted messages

(5) Coordination of activities with other IMPS

(6) Coordination of activities with its HOST

(7) Measurement of network parameters and functions

(8) Detection and disposition of faults

The specific functions to be performed by the IMPS, and the algorithms used to implement the functions, are all subject to change with

time. These changes may occur as the network changes in size, or changes in mode of application, and is subjected to improvements and experimentation. It is necessary, then, that the design of the IMP programs and hardware be such as to permit these changes to be made with relative ease. The program-hardware tradeoffs, the modularity of these elements, the ability to make program changes from remote locations, and the selection of the source language for the programs are all of concern here.

1. Breaking of Messages into Packets

HOSTS will wish to communicate with messages of longer length than can be reasonably transmitted as a single block due to the increasing probability of retransmission. Thus, a Packet is defined as the inter-IMP unit and Message as the inter-HOST unit. A packet will not exceed 1024 bits in length; the IMPS must break all longer messages into multiple packets. Messages will be limited to 8192 bits so as not to require excessive buffer space.

2. Management of Message Buffers

The IMP is to provide buffers for the temporary storage of messages or portions of messages. These buffers will be used:

(1) when speed conversions are to take place

(2) for messages that encounter delays in being forwarded

(3) to provide a copy of forwarded data for which no indication has yet been provided of error-free receipt.

The IMP is to control the flow of the data in and out of its buffers, permitting the flow of incoming data from the net and from its HOST when buffer space is available, quenching this flow when the space is scarce or unavailable. This control (stimulating or quenching) is brought about through the use of IMP-generated abnormal packets.

3. Routing of Messages

For each incoming packet and each IMP-generated packet which is not destined for a particular IMP'S HOST, the IMP chooses the next immediate destination by the execution of a routing algorithm. Such an algorithm will typically take into account the ultimate destination of the packet, the connectivity of the network, the loading and condition of the communication links and other IMPS, and the message priority. When the routing algorithm indicates that a message whould wait for a busy

channel, then that message must be placed on a queue in the buffer and the rules appropriate to the priority discipline in effect must be adhered to. The IMP will also be expected to exchange routing and loading information with HOSTs and other IMPs of the network, as dictated by the routing process, thus providing periodic updating of the routing tables. (See Appendix G)

4. Generation, Analysis and Alteration of Formatted Messages

The message and packet exchanges between IMPs, and between IMP and HOST, will conform to the formats in the ARPA established protocols. The IMP is to construct all of its outgoing messages and packets in these formats. Header information on a message will be altered in the IMP when appropriate. All IMP analyses of incoming messages and packets are to assume that these messages and packets will (except in case of error) also conform to these formats. Transmitting HOST messages will be disassembled, as requird, into packets. Receiving HOST messages will be reassembled, as required, form incoming packets. Thus, in both transmitting and receiving, the HOSTs deal with complete messages.

The IMP will provide the necessary serial to parallel, and paralled to serial conversions for communication with the communication circuits and the attached HOSTs.

5. Coordination of Activities with other IMPS

IMPs will coordinate their actions with other IMPs in the network through the use of IMP or HOST generated messages. These messages will provide for the positive or negative acknowledgement of messages, and the temporary cessation or reinstitution of message transmission. When required, as through a negative acknowledgement, the IMP will repeat messages which have been received in error. Through the use of IMP generated messages, network status information will be sensed and percolated through the network for use in changing the routing tables.

In addition to generating such coordinating messages the IMP will receive and react to coordinating messages.

6. Coordination of Activities with its HOST(s)

Each IMP is required to coordinate its actions with its own HOST. These activities include the acceptance of messages from the transmitting HOST upon request (at the IMPs convenience), and the delivery

of messages to the receiving HOST (at the receiving HOST's convenience). Of course, if the receiving HOST breaks down or accepts messages too slowly, then its IMP must take the necessary steps to prevent further messages from entering the net and being delivered to it. As messages arrive from the transmitting HOST, the transmitting IMP must prepare them into packets with appropriate headers, and parity check bytes. Message protocol must be followed in preparing these packets.

7. Measurement of Network Parameters and Functions

An IMP will, at time, be required to measure selected network parameters. These parameters may include:

(1) occupancy of all communication circuits

(2) utilization of the IMP's buffer storage

(3) utilization of the IMP's CPU time

(4) delays encountered by messages due to IMPs

(5) failure rates of the common carrier net

(6) message arrival rates

(7) message lengths

(8) distribution of network traffic

(9) net configurations

(10) home use versus remote use of computer

(11) queue lengths

(12) transmitting HOST queueing delays

In order to observe delays and the operation of the routing mechanisms, the IMPs will be required to tag selected messages and observe their movement through the network. These data gathered by an IMP may need to be incorporated into an IMP generated message destined for its own or another receiving HOST.

The measurement activities of an IMP will be selectively initiated and terminated by control messages received rom its host or another IMP.

8. Detection and Disposition of Faults

The IMP is to protect itself and the network from the effects of faults, whether the source of the fault is external or internal to the IMP. The protection process will involve the detection of faults, and a reaction to faults, where a primary goal of the reaction is to contain the effects of a fault. These activities are to be essentially automatic requiring little or no human intervention.

To detect faults from external sources the IMP must continually examine and analyze the signals presented to it by the communication channels and HOST-IMP channels. The analyses should determine:

(1) if the signals adhere to the established protocols

(2) if the data contained in a message for use by an IMP is valid

The various forms of error checks specified in the protocols directly relate to this fault detection process.

The detection externally caused faults must also be concerned with abnormal time behavior of signals. For instance, signals that are too rapid or too slow in response may indicate the presence of a fault. The non-responsive external source should be detected through the use of timing procedures.

Upon detection of a fault the IMP should attempt to isolate its effect in a manner that results in the corruption of a minimum number of messages. Such isolation may involve the negative acknowledgement of a packet or a message.

Recovery procedures should be used to restore service, in an orderly manner, when the fault has been removed. Transmission faults may be overcome by retransmission of the faulty data. Network control messages exchanged between IMPS may report the restoration to service of a faulty IMP or HOST.

The IMP will be so designed that it can be stopped, started, and its operating program loaded or examined by selected network HOSTs.

Such HOSTs, using special secure processes and employing the networks communications facilities, may be used to effect the remote recovery of IMPs suffering from serious faults. Such recovery may effect the automatic restart, with a fresh program, of a halted IMP.

9. IMP Software Separation Protection

Since there is a portion of the IMP software that the HOST's staff may write it is required that hardware protection be provided to prohibit that portion of the software from harming the basic IMP operation. Standard protection hardware for providing a previleged executive mode should be adequate. The costs for such hardware, if available, shall be identified.

The protection required should prohibit the HOST's staff program from:

(1) controlling any IMP input or output operation except those of the HOST-IMP channel

(2) changing that stored information required by the IMP to serve the remainder of the network

(3) using the processing or storage capabilities of the IMP in such quantities or at times that result in reduced service to the remainder of the network.

D. The HOST-IMP Interfaces

Due to the variety of HOST machines and to the differences in the existing on-line entry points into these systems, it is not possible to describe a universal manner of IMP connection appropriate to all HOST systems. The contractor, therefore, need not propose individual modifications to interface to each host; rather he should propose a single standard interface. All modifications to that interface will be tasked separately after contract award.

It is desired to each IMP interface to more than one HOST using a multiplexing scheme. The hardware and software necessary to accomplish the multiplexing may be too complicated and expensive to warrant its implementation. The Contractor shall include his own evaluation of the additional cost of interfacing to multiple HOSTs, but should not include that cost in his basic proposal.

The software within the IMP can be functionally separated into two categories: (1) the HOST side and, (2), the network side. Since the HOST's staff can program the IMP, it is recommended that physical memory protection be provided. The following functions should be included in the software of the HOST side of the IMP:

(1) IMP-HOST single channel control

(2) Buffers and buffer control

(3) Message to packets and packets to message conversion

(4) Packet formatting.

The contractor shall leave sufficient memory space for the HOST to add specialized routines to do:

(1) Character code conversion

(2) Destination discrimination necessary for multiple HOSTS connected to the IMP

(3) Repacking of binary messages.

E. The IMP-CARRIER Interfaces

The only variation from site to site of the CARRIER side of the IMPs is the number of attached data-sets, so the IMP-CARRIER interface can be identical at all sites. This will be a multiplex interface capable of easy extension to handling six (6) data-sets, asynchronous and in parallel, but implemented in a modular way with data-set control cards associated with each duplex carrier link. The initial implementation need only contain those modules implied by the communication circuit map of Appendix B or its equivalent at the time of total network implementation. Although six data-sets may be connected to an IMP, the software should be designed to optimize the time delays within the IMP for three communications lines.

In order to achieve the speed and simplicity desired for the CARRIER side of the IMP, channel hardware is required for the following functions:

(1) Character sensing, as required for start, stop, and escape characters

(2) 24 bit cyclic parity construction and comparison

(3) Real time clock of bit time (20 microseconds) resolution

(4) Fault detection and status presentation of fault type.

If hardware is not utilized in the design, the ability of the software to accomplish these functions must be clearly demonstrated.

F. Network Performance Characteristics

The criteria upon which the network will be judged and their priority are given below:

(1) Message delay

(2) Reliability

(3) Network capacity

For the purpose of calculation and evaluation, a simplified model of the network is presented. The model should allow the contractor to evaluate his ideas without either knowing the specific topology of the network (which is not yet fixed) or using the estimated (and unreliable) HOST to HOST traffic statistics presented in Appendix E. The model should be used in calculating the delay times and network capacity.

1. Message Delay

The message delay is the time required for a 100 character message (single packet message) to go from the origin IMP (associated with the sending HOST) to the destination IMP (associated with the receiving HOST). It is desired that the average message delay over the entire network be minimized. In particular, the average message delay should be less than 1/2 second for a fully loaded network (as described in 3 below).

The following factors shall be included in calculation of the message delay:

a. Communications Delay

b. Full Packet Transmission Delay

c. IMP Processing Delay

d. Queuing Delay

e. Average Path Length in Store-and-Forward Operation

2. Reliability

It is vitally important that the users have confidence in the overall reliability of the network. Low probability of wrong or lost messages, particularly when undetected, is desired. The mean time between failures due to undetected parity errors is predicted to be less than one message per year; other errors will hopefully not increase that rate significantly. Errors that occur after the message is passed to the HOST should not be considered. Also, when a HOST refuses to accept messages, the loss of those messages, if reported, is not considered as important as other losses.

3. Network Capacity

Third and lowest priority criterion is the network capacity. The capacity is measured as the maximum bit rate that can be input at every node and still have the message delay remain under 1/2 second. It is expected that the capacity will be approximately 20 Kb per node for nodes with three communications lines. The bidder should also calculate the single node maximum input rate with all other nodes quiet as a function of the number of communications lines connected to that node.

4. Network Model

The following is a simple model of the network describing its topology and data transmission. Several parameters are given to aid in determining the delays encountered by packets. The parameters are given as averages over the nodes and over a number of sample networks. What is not included is the processing time and queuing delays required to accomplish all the network functions, which should be estimated by the bidder.

a. The number of links which a message must traverse to get from one node to another (represented by the letter m) is 3.

b. The number of links connected to each node (represented by k) is 4.

c. The input rate from the HOST to the IMP is 20 kilobits per second.

d. The traffic flow on each communication channel is 15 kilobits per second.

e. The sizes and distribution of normal packets will be 50% 112 bits long, and 50% 1040 bits long. Each of these packets must be acknowledged and an acknowledgement packet is 112 bits ong. The total distribution of packets is therefore 75% 112 bits long and 25% 1040 bits long. The average number of bits per packet is therefore 364 bits.

f. All nodes are separated by 300 miles. The predicted delay due to distance on the communications line is 5.5 microseconds per mile. In addition, there is an estimated 760 microsecond delay in the modem. Thus, total delay due to communications is 3.17 milliseconds per link.

The parameters described above will allow calculation of: the total input rate into each IMP, the rate which packets enter and leave a node and thus the time available to process them; and the total message delay. The bidder should illustrate that the processor chosen will achieve the message delay and communication line capacity modeled or, if it cannot, determine what message delay and capacity it can maintain.

G. HOST-HOST Traffic Characteristics

The HOST to HOST traffic volumes shown in Appendix E are based on the best (albeit poor) estimates available at this time. Note that this traffic is on a site to site basis, and not necessarily descriptive of the traffic on the various communication network circuits. It is necessary to account for the nature of the routing doctrines used by the IMPs in order to develop estimates of circuit traffic.

The trimodal characteristic of the traffic arises from the three generation mechanisms at work. Type I traffic (high rate of origination, short length) is directly related to the individual keyboard actions of a user at a console. Type II traffic (moderate rate of origination, medium length) represents responses directed to a teletypewriter mechanism or to a cathode ray tube display. Type III trafic (low rate of origination, long length) represents large data transfers to land from magnetic tapes, disks, cores, etc.

The traffic generation processes are not necessarily independent, for a message from one host to another may well give rise to a message from the latter host to the former. One message, for instance, may be Type I and the response Type II. Because of the interactive process in which many users may be involved, this form of traffic dependency might be quite prevalent.

As a result of the communication protocol, the communication circuits will be subjected to IMP generated traffic. Message acknowledgements (Appendix F), for example, contricute to this additional traffic. Such IMP generated traffic is not included in the estimates of Appendix E.

H. IMP-Operator Interface

The interface with the operator is to consist of lights (or equivalent displays) and switches only. No restrictions need be imposed regarding operator access to the lights. It shall be possible to restrict (perhaps by use of a lock and key) access to those switches than can be used to affect the operation of the IMP.

Appendix D, "Input and Output Facilities for the IMP Operator", describes the minimum facilities to be provided. Additional facilities should be provided as required for reasons of operation, debugging, and maintenance.

II. Network Contractor Performance

This contract is for the installation, operation and maintenance of a multiple-node network, servising as the communication facility for research and development of data exchange among computers. At each node, there will be at least one (1) Interface Message Processor (IMP) or Terminal IMP, as given in Exhibits 1 and 2. The Contractor shall have full system responsibility including design, development, fabrication, installation, test and maintenance of all IMP's in the network, including the communication software. The Contractor shall provide system documentation in regard to the IMP hardware, the communications software, the IMP programming language and the appropriate interfaces between IMP and Host computers and between IMP and telephone circuit modems.

A. Design the COMMUNICATION SUBNET consisting of:

1. IMPs (interface message processors)

2. data-set multiplexor interfaces capable of handling six (6) full-duplex 50 kbps lines simultaneously and providing the I/O processing required for full occupancy of all lines.

3. HOST-IMP standard interfaces capable of transferring data at a data rate in excess of one megabit per second. (preferably one-half the IMP memory data rate).

4. The communication software, which must provide

a. Store-and-forward facilities with dynamic routing

b. Positive and negative message acknowledgement

c. Fault detection and recovery to guarantee virtually error-free transmission

d. IMP-IMP control and response as required by the system design and network parameter measurement requirements

e. Message decomposition to communication packets and reassembly to message form in the transmitting and receiving IMPS respectively

f. Priority handling of shorter messages.

5. The assembly or compilation software required for the construction of IMP programs by the user contractors, implemented on some system or systems accessible to the user contractors.

B. Construct a prototype IMP including the IMP-CARRIER and HOST-IMP interfaces. Write, checkout and demonstrate the communication programs operationally in this prototype. Attach this prototype to the selected CARRIER and carry out a closed loop connection and demonstrate the operation of the communication system design as proposed by the network contractor and accepted by ARPA.

C. Construct and install IMPS and associated interfaces and demonstrate the total network design as proposed by the Contractor and accepted by ARPA.

D. At the time of completion of prototype checkout, the Contractor shall provide system documentation in regard to the IMP hardware, the communication software, the IMP programming language and the appropriate HOST-IMP interface.

III. Elements of System Design

The network Contractor should be sure sure to include his considerations concerning:

A. Message decomposition and assembly in terms of efficient communication packets.

B. Acknowledgement procedures.

C. Routing algorithms.

D. Traffic control.

E. Error assessment and recovery.

F. IMP-HOST interface.

G. IMP-CARRIER interface.

H. Fault recovery.

I. IMP-IMP control messages and interrupt facility.

J. Estimated timing factors, e.g., queuing and processing delays in packet transmission.

K. Network performance measurements.

L. Buffer sizes, memory size for the CARRIER side of the IMP, memory size for the HOST side of the IMP.

M. Network performance estimates of the totally implemented network.

N. Complete description of the processor and peripheral equipment* required

O. Description of all special purpose hardware required.

The network contractor should include his considerations concerning the following optional items:

A. Modifications for multiple HOSTS connected to one IMP

B. Memory protection to maintain store-and-forward operation during checkout of new IMP programs

C. Additional hardware and software necessary for the IMP to be a terminal controller and/or data concentrator for its HOST or for the network (i.e., no HOST, just terminals).

*It is anticipated that mass storage devices such as tapes, disks or drums will not be required for the normal operation of the IMP.

APPENDIX A
ARPA NETWORK NODES

Organization	Abbrev.	Site Location	Network Liaison	Computer
Dartmouth University	DART	Hanover, N. H.		GE 635
Mass. Inst. of Tech.	MAC	Cambridge, Mass.		IBM 7094 PDP-6/10, GE 645
Bolt, Beranek & Newman	BBN	Van Nuys, Calif		SDS 940 PDP-10
Harvard University	HARV	Cambridge, Mass.		SDS 940, 360/50 PDP-1
Lincoln Lab	LL	Cambridge, Mass.		TX-2, 360/67
Bell Telephone Lab.	BTL	Murray Hill, N. J.		GE 645
Adv. Res. Proj. Agency	ARPA	Wash., D. C.		DDC 338
Carnegie Mellon Univ.	CMU	Pittsburgh, Pa.		1100, 360/67, G-21
Univ. of Michigan	UM	Ann Arbor, Mich.		360/67
Univ. of Illinois	UI	Urbana, Illinois		B-6500/ ILLIAC IV
Washington University	WU	St. Louis, Mo.		Spl Eqpt
University of Utal	UTAH	Salt Lake City, Utah		1108
Univ. of Cal. Berkeley	UCB	Berkeley, Calif.		SDS 940, SCC 6700
Stanford Res. Inst.	SRI	Palo Alto, Calif.		SDS 940 (2)
Stanford University	SU	Stanford, Calif.		PDP-6/10
U of C, Santa Barbara	UCSB	Santa Barbara, Calif.		360/50
U of C, Los Angeles	UCLA	Los Angeles, Calif.		Sigma-7
RAND Corporation	RAND	Santa Monica, Calif.		PDP-6, IBM 1800
System Devel. Corp.	SDC	Santa Monica, Calif.		360/50-65

ARPA NETWORK TOPOLOGY
(Example)

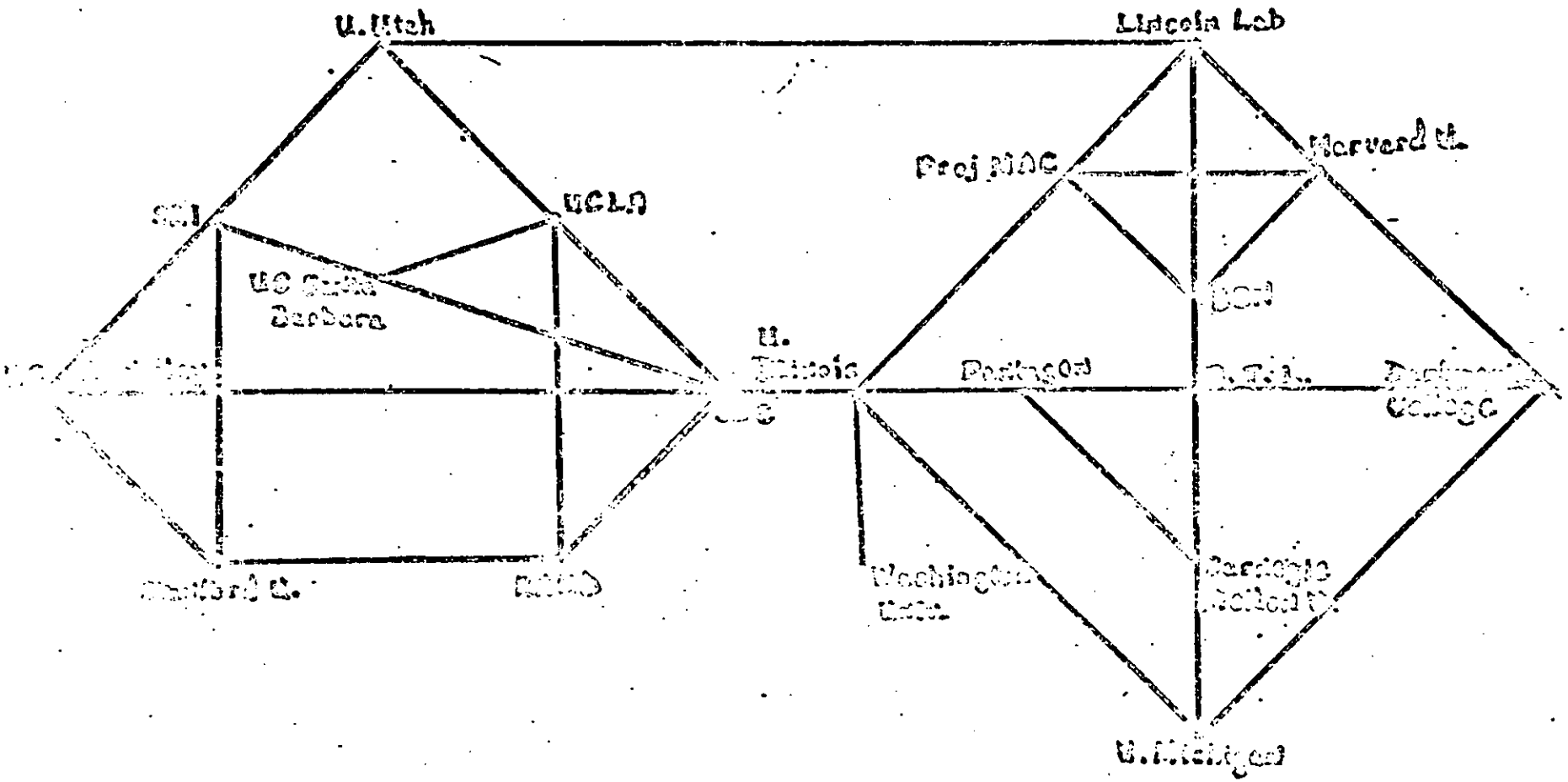

Average Number of Links Between any two Nodes = 2.55
All links are 50 kilobit/second leased lines.

APPENDIX C

IMP DELIVERY SCHEDULE

Site	Operational Date (in months after contract start)
University of California-Los Angeles	8-1/2
Stanford Research Institute	9-1/2
University of California-Santa Barbara	10-1/2
University of Utah	11-1/2

APPENDIX D

Input and Output Facilities for the IMP Operator

Outputs

1. Contents of the program counter
2. Contents of the instruction register
3. Contents of the accumulator register
4. On-off state of electrical power to computer
5. Run-halt state of computer
6. Busy-idle state of each direction of each IMP-HOST channel
7. Transmit-no transmit state of each communication terminal
8. Receive-no receive state of each communication terminal
9. Connected-not connected state of each switched communication terminal
10. In service out of service state of each communication terminal

Inputs

1. Change contents of the program counter
2. Change contents of the accumulator
3. Turn electrical on-off to computer
4. Cause computer run, single step, halt
5. Cause computer to load from HOST or communication terminal
6. Cause computer to dump to HOST or communication terminal
7. Cause master clear in computer
8. Make-busy specified data terminals
9. Force disconnect of specified data terminal
10. Limit-no limit access to all other operator inputs

ARPA NETWORK

Data Rates Between Nodes in Kilobits/sec.

From		To 1	2	3	4	5	6	7	8	9	10	11	12	13	14	15	16	17	18	19	Node Output Total	Node Input Total	I/O Rate Total
1.	Dartmouth		2		1		2	1							1		1				8	4	12
2.	M.I.T.	1		1	2	2	1	1	1	1	1	1	1	1	1	2	1	1	1	1	23	15	36
3.	U.S.C.		1		1				1				1	2	1						7	12	19
4.	Harvard		1	1		1							1		1				1		6	11	17
5.	Lincoln Lab		1				1	1		1	1		2		1			1	1		10	18	28
6.	B.T.L.	2	1												1						4	8	12
7.	Pentagon					1													1	1	3	10	13
8.	Carnegie		1	1						2			1		2	1		1	1		10	9	19
9.	U of Mich		1			1			2		1	1			1		1			1	9	8	17
10.	U Illinois		2		1	5	1	1	1	1			20	1	2	2	10	1	1	1	50	13	63
11.	Wash. U.					1	1								1						3	5	8
12.	U. Utah		1			5		1	2	1	8				1		5	1	1		26	29	55
13.	U.C. Berkeley		1	6	3		1			1					3	1	1	1	1	1	20	6	26
14.	S.R.I.	1	1	2	1	1	1	1	1	1	1	1	1	2		2	1	1	1	1	21	19	40
15.	Stanford U.		1						1						1						3	8	11
16.	Santa Barbara				1						1	1	1					1			5	22	27
17.	U.C.L.A.											1			1		1			1	4	10	14
18.	RAND Corp				1	1		2					1				1	1		1	8	10	18
19.	S.D.C.		1	1				2							1			1	1		7	8	15
																			Total		225	225	

APPENDIX F

DATA COMMUNICATIONS CONVENTIONS

This section describes the data communications conventions which specify at a gross level the protocol which allows the host to communicate with its IMP and the IMP's to communicate with one another. This section, like the others, is designed to provide guidelines to the contractor who may, if he wishes, modify any part of the description in his proposal. Each modification will be evaluated, and will be considered in the final contractor selection.

HOST TO IMP

The Host and the IMP communicate using a form called a Message. There are two kinds of messages, the first being a Message destined for (or coming from) another Host; the second is a message to be interpreted by the IMP as an IMP command (or generated by the IMP for the information of the Host). The first type of message will be called the "Normal" message because the primary function of the Message Switching Network is the transmission of this message to the destination host. The other type of message will be called the "abnormal" message and will be used for functions such as the query to (and response from) the Host to insure that the Host (and IMP) are functioning properly, error messages to indicate format or illegal character errors in "Normal" messages, etc.

NORMAL MESSAGE

A normal message when transmitted to the IMP, will consist of not more than 8,192 bits of information and should contain the name of the destination host and identification number which can be used for reference by the IMP and the receiving Host. The bit structure of the normal message will be decided by the Host and will probably be different from machine to machine. It is the Host's responsibility, however, to provide the character translation program for his IMP which converts his bit pattern to the standard form used on the network. Since the translation may be greater than one for one, the message may now be greater than the original 8,192 bits. The IMP can then make a decision to send the longer message or return an abnormal message saying a format error has occurred, then drop the message.

The normal message has two kinds of information - character and binary. The principal difference between the handling of these forms of

information is that the character text will be transformed from sending host's format to network standard format and then, after transmission is completed, to the receiving host's format; whereas binary text will be received bit for bit identical to what was sent (though some minor modifications may be made during transmission, as described later).

ABNORMAL MESSAGES

The forms and types of abnormal messages have not been worked out in detail. It will be the Contractor's responsibility to decide what is required to maintain effective communications between the Host and its IMP. The most important constraint is that the number and variety of these messages be minimized so as to minimize the burden the IMP places on the Host (this is a basic network tenet).

Your quotation should contain suggestions of the types of abnormal messages that may be required. This will by no means be binding; it is expected that the final form of abnormal messages will not be decided until after the testing of the initial (four node) network.

IMP to IMP

IMP's communicate with one another using forms called Packets. There are two basic kinds of packets: "Normal" packet is any packet whose final destination is as a normal message for a Host; an "Abnormal" packet is a packet whose final destination is an IMP. All packets are to be equal to or less than 1024 bits starting with the first character of the Header and continuing through the parity code. A packet has three elements within its structure: a Header which must be present in all packets, the Text (Binary and/or Character) which may be missing or null, and the parity check which will be 24 bits long.

To simplify the logic and programming required, all packets will be transmitted on a continuous stream over the communication line between IMP's, i.e., no nesting of packets is permitted.

NORMAL PACKETS

A "Normal" message may be broken into several packets according to its size (multiple packet message, MPM), but a packet will contain only one message. The packets in MPM are not bound together until they reach the destination IMP where they are formed back into a normal message.

They may even flow through different paths of network and reach the destination IMP out of sequential order. A message may also be small enough to fit into a single packet (Single Packet Message, SPM), or very small, e.g. single character (Very Small Message, VSM). All normal messages generate normal packets at sending, and visa versa at receiving.

ABNORMAL PACKETS

Abnormal packets are used for error control, acknowledgements, and the transmission of network status, e.g. new routing tables, communication line down, IMP down, Host down, measurement information, etc. An abnormal packet may be generated by an abnormal message or because of some special internal state of the IMP, e.g. buffers full. All abnormal packets must be acknowledged with the exception of acknowledgement and negative acknowledgement packets.

PACKET FORMAT

The Packet Format is based on an eight bit code (character) format. The packet is sent in 8 bit transparent binary form, independent of whether the text is binary or character. Four special control characters are required to delimit the start and end of a packet and to maintain the communications line. The control characters are:

SYN(Synchronization character). This character is used to fill the communications line between packets; this is required because of the synchronous communications line.

STX(Start of Text). This character indicates the start of a packet and must be preceded by a DLE.

ETX(End of Text). This character indicates the end of a packet and must be preceded by a DLE. The three character cyclic checksum must follow the ETX character.

DLE(Data Link Escape). This character is used to indicate the packet is transmitted in binary form. DLE is the only character that must be handled as a special case within the packet. If a DLE occurs within a packet it should be preceded by an additional DLE on transmission, which should be deleted upon reception of the packet.

The packet should look as follows:

```
S          S D S  Fixed          D E C C C S          S
Y . . . . Y L T  Length     TEXT L T S S S Y . . . . S
N          N E X  Header         E X 1 2 3 N          N
```

HEADER

The header is fixed length and contains all the information required by the IMP's to transmit the packet to its final destination. The packet header as envisioned to date is to contain six characters with the following information:

1. Destination Code (8 bits)

2. Origin Code (8 bits)

3. Message I. D. (16 bits)

4. Packet Number (5 bits)

5. Hand Over Number (6 bits)

6. Packet Priority (1 bit)

7. End to End Message Acknowledgement Required (1 bit)

8. Last Packet in Message (1 bit)

9. Text is for IMP rather than Host (1 bit)

10. Text in Packet is in binary (1 bit)

ERROR CONTROL

A twenty-four bit cyclic parity check has been chosen as the error detection scheme. The cyclic parity check corresponds to polynomial multiplication. A 1000 bit block of binary data may be interpreted as a polynomial $a(x)$ of degree 999 whose coeficients are zeroes and ones. Let $g(x)$ be a polynomial of degree p with binary coefficients. The product $a(x)g(x)$ of the two polynomials with all coefficients reduced modulo two corresponds to a block of 1000 + p bits which may be error checked by polynomial division by $g(x)$. It is possible to arrange matters so that

the first 1000 bits are exactly equal to the information bits and the last p bits are parity check digits. This is possible from the Euclidean division algorithm by selecting the last p bits to correspond to the remainder polynomial when $x^p a(x)$ is reduced modulo $g(x)$. A p stage linear shift register can be constructed to perform division by $g(x)$ and this same device can also be used to detect the presence of errors since that operation requires division by $g(x)$ too. The $g(x)$ recommended is $g(x)=(x^{12}+x^6+x^4+x+1)(x^{12}+x^{10}+x^4+x^3+x+1)$. The shift register which implements this code is illustrated below:

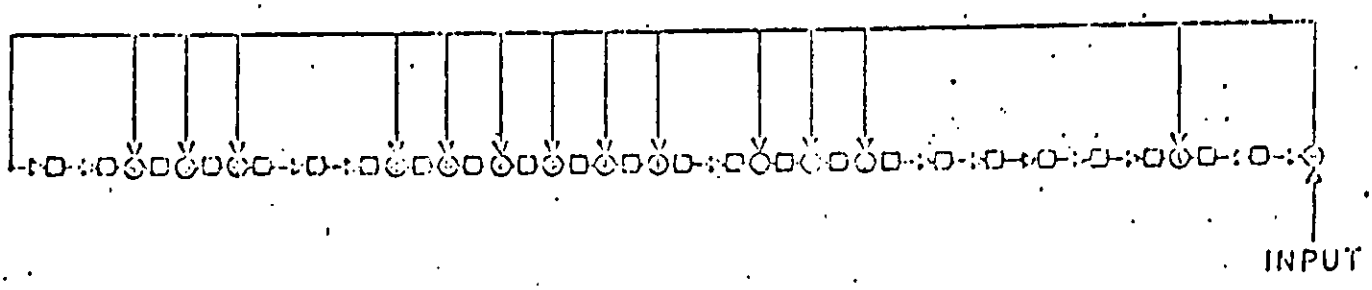

This device is used for both the generation of the checksum and error detection. The device must be cleared upon receipt of the DLE STX sequence and started on the first character following the STX character.

The generation of the parity code is done by passing the packet bits stream through the device (including the final DLE EX). The parity code is then the 24 bits left in the device and is obtained by shifting the bits out, packing them into characters and transmitting them (high order bit is the first one out of the shift register).

The detection of errors requires the passing of the packet through the device until DLE EX is sensed. The next three characters (the parity code) are input, then the 24 bits in the device are sensed for all zeros which indicates that no error has occurred.

Using this parity check scheme the mean time between undetected errors will be approximately 1/2 to five years throughout the entire net.

NETWORK PACKET FORMAT
(Example)

	Bits
DLE	8
STX	8
PRIORITY (1), FOR IMP (1), HANDOVER #(6)	8
DESTINATION	8
ORIGIN	8
MESSAGE I.D.	16
PACKET #(5), LAST (1), BINARY (1), END ACK. (1)	8
CONTENT TEXT OR BINARY 0-117 CHARACTERS	0-936
DLE	8
ETX	8
CYCLIC PARITY CHECK	24
Total Length	104-1040

APPENDIX C

ROUTING

An IMP, upon receipt of a packet, must decide which of its communications links to send the packet out on. The line is chosen using the Routing (RT) which must be generated by the IMP from the Interconnection Table (IT). The IT is a tabular description of the interconnection between nodes in the network, and is identical in each IMP. Each IMP must also have a routing table to tell it directly which communication line is best to use to get a packet to another node. This table is called the RT and is different in each IMP. Described below is one method of obtaining the routing; there are many others. The contractor should describe the one chosen for his system. The method below also chooses a particular network configuration as an example. This network will not be the final configuration. In this scheme an intermediate table must be generated from the IT which describes the number of links to the destination IMP for each communication line. The RT is formed from the Intermediate Table by sorting the lines into first, second, third and fourth choice.

Interconnection Table

The Network, as presently conceived, will have all point to point leased line communications. The IT will therefore be fairly stable, changing only to:

(1) Show the addition of new nodes and/or communication lines, and

(2) Reflect the fact that an IMP or communication line has gone down or has come back up.

An example network and its IT is given below. The nodes are numbered from 1 to 10, with a 0 indicating no connection exists; the four communication lines are lettered A, B, C and D.

Intermediate Table

The Intermediate Table is generated in each IMP from the IT each time a change in the IT occurs. The technique employed in this scheme involves starting with a cleared table and entering a 1 in the rows corresponding to the nodes connected directly to yours (nearest neighbors) and in the column representing the appropriate communication line. Then find the "nearest neighbors" of all nodes with a 1 in its row and place a 2

in the appropriate column. This procedure should be continued until all entries in the table are covered. In the example, the Intermediate Table for SRI is developed; this table would of course be different for each node.

Routing Table

The Routing Table is a description of the priority of the communications lines in terms of the number of links required to get a packet to its destination. The columns are numbered, with the first entry being the highest priority choice. Entries in the Intermediate Table that are two or more higher than the minimum entry in the same row are underlined in the Routing Table. They are bad choices because the routing doctrine at the next node will probably send the packet directly back to the original node.

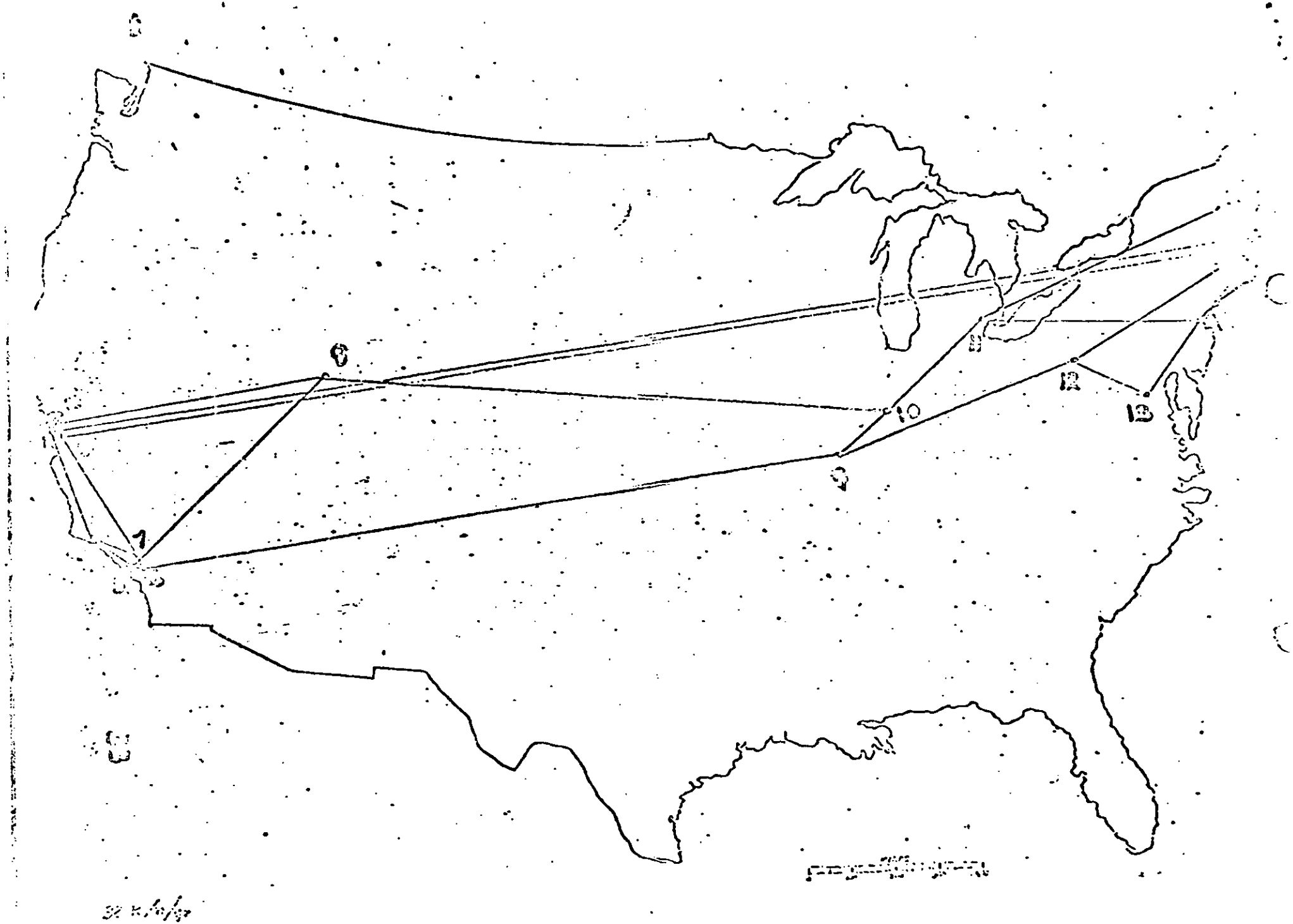
6
7
9
10
11
12
13

	Interconnection Table				Intermediate Table			Routing Table			
	A	B	C	D	A	B	C	1	2	3	
1	19	7	2	0	-	-	-	-	-	-	-
2	8	1	3	0	5	4	1	C	B	A	-
3	2	4	17	0	4	3	2	C	B	A	-
4	7	5	3	0	5	2	3	B	C	A	-
5	8	6	4	0	6	3	3	B	C	A	-
6	9	5	7	0	6	2	4	B	C	A	-
7	6	4	1	0	6	1	4	B	C	A	-
8	10	5	2	0	5	4	2	C	B	A	-
9	10	12	6	0	5	3	4	B	C	A	-
10	11	9	8	0	4	4	3	C	A	B	-
11	18	14	10	0	3	5	4	A	C	B	-
12	16	13	9	0	4	4	5	B	A	C	-
13	14	12	0	0	4	5	-	A	B	-	-
14	15	13	11	0	3	6	5	A	C	B	-
15	16	14	10	0	2	6	5	A	C	B	-
16	15	12	17	0	3	5	4	A	C	B	-
17	3	16	18	0	3	4	3	A	C	B	-
18	17	19	11	0	2	5	4	A	C	B	-
19	18	15	1	0	1	6	5	A	C	B	-

ANNEX "B"

REQUIREMENTS FOR ARPA SPONSORED CONTRACTS

I. GENERAL INFORMATION

a. This is an Advanced Research Projects Agency (ARPA) sponsored contract and, as such, contains certain requirements not necessarily contained in other Government contracts.

b. The Contractor shall make maximum use of DoD sponsored Information Analyses Centers (IAC) in the early stages of work under the contract. A list of these centers will be made available upon request to the Director, ARPA, Attention: ARPA Technical Information Office, 1400 Wilson Boulevard, Arlington, Virginia 22209.

II. DISSEMINATION OF INFORMATION

a. Classified information and all information produced under classified contracts, which the Contractor proposes to release to the public, must be reviewed prior to such release. This applies to all types of disclosures, e.g., oral/visual disclosures by presentations at unclassified meetings or documentary disclosures by publication of papers in technical journals. It includes publicity releases, sales brochures, advertisements, etc. Requests for permission to release such information shall be submitted; in five (5) copies, by the Contractor directly to the Director, ARPA, Attention: Security Review Officer.

b. Unclassified information not generated under classified contracts, such as basic research performed by Universities under fundamental research contracts, does not require review and approval in accordance with a. above.

c. Unclassified information developed under unclassified contracts awarded to colleges and universities may be released to the public without review and approval in accordance with a. above provided that no access to classified information was required by the researchers either during the development of the program or during the performance of the contract and provided further that release of the information is not otherwise limited by the terms of the contract.

III. CONTRACTOR REPORTS

The contract will specify the reports, chosen from those listed below, that are required under the contract. Reports shall be prepared in accordance with the guidelines contained herein. Deviations in content, format or frequency must be approved in writing by the Contracting Officer.

MANAGEMENT REPORTS

a. The contract will specify whether the management report is to be prepared on a monthly or quarterly frequency. Two (2) copies of Management Reports should be submitted to ARPA, Attention: Program Management, by the Contractor within 15 days after the close of the reporting period. The following symbol shall be prominently displayed on the cover of each Management Report: Form Approved, Budget Bureau No. 22 - R0293. The initial reporting period will begin on the first day of the month following the date performance begins under the contract. Quarterly reports will thus cover three (3) months of effort and will not necessarily fall due on calendar quarters. The Contractor shall notify ARPA promptly of any major occurrence of a technical or management nature that takes place between the normal submission of reports.

b. The Management Report should be in letter form and, generally, should not exceed three (3) pages in length. Its primary purpose is to inform ARPA management of significant events, accomplishments, and problems associated with the progress of work. The report should represent a narrative summary of the work underway and should be prepared to reflect the topics outlined below. Any of the topics below may be covered by noting such comments as "none," "not applicable," or "no significant change" when appropriate. (The Management Report should not be used to document technical progress or contain technical charts, graphs or formulas. Such data belong in technical reports.)

1. Research Program Plan. A brief statement of the program's objectives and the plan for research should be shown in this item.

2. Major Accomplishments. A brief description, written in non-technical terms, of any findings or accomplishments that should be brought to the attention of ARPA management. The accomplishment of major milestones (where the regular milestone report described below is not required) or the occurrence of technological breakthroughs should be reported.

3. Problems Encountered. This item should include difficulties which have affected, or could affect the progress of the work. These would include problem areas of management significance such as: Personnel, facilities, contracts, funds, strikes, disasters, etc. Significant problems of a technical nature should also be included, in brief, non-technical terms.

4. Fiscal Status. (Items B and C below required for Cost Type Contracts only):

A. Amount currently provided for contract (or in-house program).
B. Expenditures and commitments to date.
C. Estimated funds required to complete the work.
D. Estimated date of completion of work.

5. Action Required by ARPA or the Contract Agent. Generally, this item will entail the assistance required in resolving "Problems Encountered."

6. Future Plans. A brief statement of any significant change which is planned in the course of the work or any new item considered to be of interest to management.

MILESTONE REPORT

(To be used only when specifically called out in the ARPA Order.) When so required, the Report of Progress Against Selected Milestones (SD Form 350) should be submitted to ARPA, Attention: Program Management, on a monthly basis within 15 days after the close of the reporting period.

a. A list of suggested milestones is to be submitted by the Contractor to ARPA and the contracting agent within 45 days from date of this ARPA Order/Amendment. (Milestones are defined as points of accomplishment which represent significant progress when completed.)

b. Milestones should include major phases of hardware development and testing, decision dates on alternate approaches, dates by which control information on facilities or government equipment is required, dates by which a capability must be demonstrated, delivery dates and other significant phasing and timing points.

c. Copies of SD Form 350 (Report of Progress Against Selected Milestones) will be furnished the Contractor if milestone reporting is required. This form will provide further guidance for the selection of milestones and for the preparation of the initial list of suggested milestones and subsequent monthly reports. The DD 350 shall be submitted to ARPA, Attention: Program Management, on a monthly basis within fifteen (15) days after the close of the reporting period.

TECHNICAL REPORTS

a. The report will present a concise and factual discussion of technical findings and accomplishments during the period. The report should be of technical publication quality, including appropriate subject matter reference. Two (2) copies of each report will be submitted directly to the Director, ARPA, Attention: Program Management. The reports are due within 30 days following the close of the report period. The initial reporting period will begin on the first day of the month following the date performance under the contract begins. Quarterly and semi-annual technical reports will thus cover three (3) or six (6) months of effort and will not necessarily fall due on calendar quarters of half years.

b. A final technical report is to be prepared upon completion of this research effort. Two (2) copies of this report should be submitted to the Director, ARPA, Attention: Program Management within 60 days after completion of the research. This report shall emphasize the accomplishments during the period since the last technical report, but shall also set forth a summation of the results over the entire period of the contract.

c. Each Technical Report will include a report summary. This summary, prominently identified, should normally not exceed a few pages. The purpose of the project must be specified, together with a description of important equipment purchased or developed, if any, and the conclusions reached by the Contractor. The most important single feature of this summary is that it must be meaningful to readers who are not specialists in the subject matter of the contract.

d. The requirement for careful preparation cannot be over-emphsized as this summary will often provide the basis for decisions on the continuity of a project. The Contractor must recognize that his achievements are quite often surveyed by Department of Defense staff who function at a level that precludes a thorough review of detailed reports.

e. Where appropriate, references should be made to more detailed sections of the report in order to guide those who may be prepared to spend the additional time required to develop a more complete and professional understanding of the accomplishments.

f. The report summary should include the following information for each experiment or program:

1. Technical problem
2. General methodology (e.g., literature review, laboratory experiment, survey, field study, etc.)
3. Technical results
4. Implications for further research (if any)
5. Special comments (if any)

IV. REPORTS FORMAT AND DISTRIBUTION

a. The heading or cover page of each report shall contain the following information:

* ARPA Order Number
* Program Code Number

Name of Contractor

Effective Date of Contract

Contract Expiration Date

Amount of Contract $

Contract Number

Principal Investigator and Phone Number

Project Scientist or Engineer and Phone Number

Short Title of Work

* The contract will specify the ARPA Order Number and Program Code Number

b. Each report prepared will include the following citation on the cover:

Sponsored by
Advanced Research Projects Agency
ARPA Order No. _____

c. Each publication resulting from ARPA work will contain the following acknowledgement:

This research was supported by the
Advanced Research Projects Agency
of the Department of Defense under
Contract No. _____.

d. Disclaimer. Each Technical Report produced under ARPA Orders will have prominently displayed on front of the document, a notice of disclaimer worded substantially as follows:

The views and conclusions contained in this document are those of the authors and should not be interpreted as necessarily representing the official policies, either expressed or implied, of the Advanced Research Projects Agency or the U.S. Government.

e. 1. Two (2) copies of each Contractor report (Management or Technical) generated on ARPA Programs shall be submitted to:

Director
Advanced Research Projects Agency
ATTN: Program Management
1400 Wilson Boulevard
Arlington, Virginia 22209

2. Two (2) copies* of each technical report only, generated on ARPA Projects, shall be submitted to:

Defense Documentation Center
Cameron Station
Alexandria, Virginia

* Twelve (12) copies if report is unclassified and unlimited;

Two (2) copies if report is classified or limited.

3. One (1) copy of each technical report resulting from work performed in the area of tactical technology shall be sent to:

TACTEC
Battelle Memorial Institute
505 King Avenue
Columbus, Ohio 43201

4. One (1) copy of each technical report resulting from work performed in the area of the strategic technology shall be sent to:

STOIAC
Battelle Memorial Institute
505 King Avenue
Columbus, Ohio 43201

5. Each copy of any Technical Report required under this contract shall be accompanied by a completed Document Control Data - R&D (DD Form 1473) as set forth in ASPR 4-113.

6. A copy of the letter transmitting required reports will be forwarded to the Administrative Contracting Officer specified in the contract.

7. Additional distribution of technical reports as specified in the contract.

Contract No. DAHC15 69 C 0179

ANNEX "C"

ACCOUNTING AND APPROPRIATIONS

ACRN	
1A	97X0400.1311 3 1260 P8D30 1220(515)-S49156 DDP192-$563,000.00
1B	97X0400.1311 1260 P9D30 1220 S49156 DDP253 - $514,727.00
1C	97X0400.1311 1260 POD30 1229 S49156 DDP372(M) - $878,461.00
1D	97X0400.1311 1260 P9D30 1229 S49156 DDP376(M)-$34,273.00
1E	97X0400.1311 1260 POD30 1229 S49156 DDP474(M)-$393,252.00
1F	97X0400.1311 1260 P1P10 1229 S49156 DDP566(M)-$1,258,076.00
1G	971/20400.1311 1260 P1P10 1229 S49156 DDP648(M)-$226,076.00
1H	97X0400.1311 1260 P1P10 1229 S49156 DDP656(M)-$19,922.00
1I	9720400.1311 1260 P2P10 1229 S49156 DDP726(M)-$1,527,000.00
1J	9720400.1311 1260 P2F10 1229 S49156 DDP784(M)-$89,706.00
1K	9720400.1311 1260 P2D30 1229 S49156 DDP784(M)-$110,000.00
1L	9720400.1311 1260 P2P10 1229 S49156 DDP789(M)-$321,000.00
1M	9720400.1311 1260 P2F10 1229 S49156 DDP820(M)-$135,767.00
1N	9720400.1311 1260 P2K10 1229 S49156 DDP821(M)-$147,793.00
1P	9720400.1311 1260 P2P10 1229 S49156 DDP822(M)-$547,520.00
1Q	9730400.1311 1260 P3P10 1229 S49156 DDP905(M)-$732,741.00
1R	9730400.1311 1260 P3E30 1229 S49156 DDP960(M)-$97,626.00
2A	9720400.4300 2479 22JT 1220 S49204 DC4604-$335,500.00
2B	9730400.4300 2479 33JT 1220 S49204 DC 4602-$31,254.00

ANNEX "D"

LIST OF CONTRACTOR'S PROPOSALS

1. Contractor's Proposal No. P69-IST-5, dated September 1968, as amended by Contractor's Proposal No. P69-IST-5A, dated 16 October 1968.

2. Contractor's Proposal No. P70-IST, dated 15 July 1969, as described within pages 2 through 9, but restricted to "Option B".

3. Contractor's Proposal No. P71-CSY-1, dated 7 August 1970.

4. Contractor's Proposal No. P71-CSY-1B, dated 1 February 1971.

5. Contractor's Proposal No. P71-CSY-1C (Option 2), dated 14 June 1971, and amending Letter thereto, dated 12 July 1971, and Proposal No. P71-CSY-1D (Option 3), dated 1 July 1971, as amended 9 July 1971, but excluding installations at SAAC (Alexandria, Virginia) and London, England.

6. Contractor's Proposal No. P72-CSY-1, dated 9 August 1971.

7. Contractor's Proposal No. P72-CSY-1-A, dated 3 December 1971

8. Contractor's Proposal No. P72-CSY-1B (Options A, C. D. E, F, and G), dated 25 January 1972.

9. Contractor's Proposal No. P72-CSY-1-H, dated 28 February 1972.

10. Contractor's Proposal No. P72-CSY-1B (Option I), dated 25 April 1972.

11. Contractor's Proposal No. P72-CSY-1B (Option J), dated 25 April 1972.

12. Contractor's Proposal No. P72-CSY-1B (Option B, Revision 1), dated 31 March 1972.

13. Contractor's Proposal No. P72-CSY-1B (Option K, Revision 1), dated 28 April 1972.

14. Contractor's Proposal No. P72-CSY-1B (Option L, Revision 1A), dated 9 June 1972, as amended by BBN letters dated 13 June 1972, 21 November 1972, and 19 January 1973.

15. Contractor's Proposal No. P72-CSY-1B (Option M, Revision 1) dated 13 December 1972.

16. Contractor's Proposal No. P72-CSY-1B (Option N, Revision 2), dated 11 December 1972

Contract No. DAHC15 69 C 0179

EXHIBIT 1

DELIVERY SCHEDULE FOR ITEM 0001

IMP/TIMP/SIMP NUMBER	SITE NAME	BBN SHIPPING DATES
BBN Prototype IMB (516)	BBN, Cambridge, Mass.	Installed
BBN Prototype NCC (316)	BBN, Cambridge, Mass.	Installed
1	UCLA (516) Los Angeles, California	Installed
2	SRI (516) Menlo Park, California	Installed
3	UCSB (516) Santa Barbara, California	Installed
4	Salt Lake City, Utah (516)	Installed
5	BBN (516) Cambridge, Massachusetts	Installed
6	MIT (516) Cambridge, Massachusetts	Installed
7	RAND (316) Santa Monica, California	Installed
8	SDC (516) Santa Monica, California	Installed
9	HARVARD (516) Cambridge, Massachusetts	Installed
10	LINCOLN (516) Bedford, Massachusetts	Installed
11	STANFORD (516) Palo Alto, California	Installed
12	ILLINOIS (516) Urbana, Illinois	Installed
13	CASE (516) Cleveland, Ohio	Installed
14	CARNEGIE (516) Pittsburg, Pennsylvania	Installed
15	NASA/AMES (516) Mountain View, California	Installed
16	NASA/AMES (TIP) Mountain View, California	Installed

IMP/TIMP/SIMP NUMBER	SITE NAME	BBN SHIPPING DATES
17	MITRE (TIP) McLean, Virginia	Installed
18	RADC (TIP) Rome, New York	Installed
19	NBS (TIP) Gaithersberg, Maryland	Installed
20	ETAC (TIP) Washington, D. C.	Installed
21	TINKER (316) Oklahoma	Installed
22	ISI (516) Los Angeles, California	Installed
23	USC (TIP) Los Angeles, California	Installed
24	GWC (TIP) Offutt AFB, Nebraska	Installed
25	NOAA (TIP) Boulder, Colorado	Installed
26	SAAC (TIP) Alexandria, Virginia	Installed
27	FT. BELVOIR (316) Fort Belvoir, Virginia	Installed
28	ARI (TIP) Arlington, Virginia	Installed
29	ABERDEEN PG (316) Aberdeen, Maryland	Installed
30	BBN (TIP) Cambridge, Massachusetts	Installed
31	CCA (TIP) Cambridge, Massachusetts	Installed
32	XEROX (316) Palo Alto, California	Installed
33	FNWC (TIP) Monterey, California	Installed

IMP/TIMP/SIMP NUMBER	SITE NAME	BBN SHIPPING DATE
34	BERKELEY LABS (316) Berkeley, California	Installed
35	UCSD (316) La Jolla, California	Installed
36	HAWAII (TIP) University of Hawaii Honolulu, Hawaii	Installed
37	PATRICK (TIP) Cocoa Beach, Florida	Installed
38	CALIFORNIA SIMP (316) NASA Ames, California	When requested by ARPA.
39	HAWAII SIMP (316) University of Hawaii Honolulu, Hawaii	When requested by ARPA

In addition to the foregoing the Contractor shall deliver the followin with each machine or when appropriate with the Final Report specified in Annex "B". The Program and Hardware Documentation, in addition to the normally supplied operating and interface manuals, consisting of the following:

a. Block diagrams
b. Data Structure
c. Control and interrup structure
d. Timing
e. Listing
f. One complete sets of hardware documentation and changes thereto.

EXHIBIT 2

DELIVERY SCHEDULE AND REPORTING REQUIREMENTS

ITEM 0002

I.

IMP/TIMP/SIMP NUMBER	SITE NAME	BBM SHIPPING DATE
DCA No. 1	JTSA Reston, Va (316)	Relocate 8/1/73
DCA No. 2	JTSA Reston, Va (316	Relocate 8/1/73
DCA No. 3	JTSA Reston, Va (316)	8/1/73
DCA No. 4	JTSA Reston, Va (316)	8/1/73
Program and Hardware Documentation for above		2 Jan 73

The Program and Hardware Documentation, in addition to the normally supplied operating and interface manuals, shall consist of the following:

a. Block diagrams
b. Data structure
c. Control and interrupt structure.
d. Timing
f. Listing
f. Two complete sets of hardware documentation

II. Reporting Requirements.

a. The Contractor shall deliver Quarterly Management Reports. The initial reporting period will begin on the first day of the month following the date performance begins under the contract modification. Quarterly reports will then cover three (3) months of effort and will not necessarily fall due on calendar quarters. The Contractor shall notify the Project Officer promptly of any major occurrence of a technical or management nature that takes place between the normal submission of reports. The Management Report should be in letter form and, generally, should not exceed three (3) pages in length. Its primary purpose is to inform DCA of significant events, accomplishments, and problems associated with the progress of work. The report should represent a narrative summary of the work underway and should be prepared to reflect the following topics.

1. Research Programs Plan
2. Major Accomplishments
3. Problems Encountered
4. Fiscal Status
5. Action Required by DCA
6. Future Plans

b. Final Report. The Contractor shall deliver a final technical report on or before 14 March 1974. The Final Report shall set forth recommendations to DCA concerning the future of the DCA networks and its management.

Item 11

DEFENSE ADVANCED RESEARCH PROJECTS AGENCY
1400 WILSON BOULEVARD
ARLINGTON, VIRGINIA 22209

21 SEP. 1976

MEMORANDUM FOR THE DIRECTOR, PROGRAM MANAGEMENT

SUBJECT: Amendment to ARPA Order 3214 - Bolt Beranek and Newman

References:
a. BBN Proposal P77-CS4-11
b. Work Statement
c. PM File Material
d. Selected Source Justification

SUMMARY:

It is requested that an amendment to ARPA Order 3214 be issued for $336,794 to Defense Supply Service-Washington to augment contract MDA 903-76-C-0252 with Bolt Beranek and Newman, in accordance with their proposal P77-CSY-11. The funding is to procure two SIMPs and gateways for the Atlantic Satellite experiment. This effort is fully funded.

OBJECTIVE:

The objective of this effort is to procure, install and check out SIMP/Gateway equipment for use with the unattended earth terminal (UET) at COMSAT Laboratories and with the Norwegian Intelsat Earth Station as part of the Atlantic Satellite experiment. This equipment will be compatible with the SIMP/Gateway equipment currently used in the US and UK portions of the experiment.

BACKGROUND AND TECHNICAL NEED:

The Atlantic Packet Satellite channel was opened in September 1975 and currently involves two earth stations, one at ETAM, West Virginia and one at Goonhilly Downs, UK. With this two station configuration, it has been possible to initiate packet satellite communication (over INTELSAT IV), to install and debug the Satellite Interface Message processors, to initiate tests of various channel access schemes, such as fixed TDMA, Slotted ALOHA and Reservation TDMA, and to design and install measurement software in the SIMPS to instrument the experiment for automated remote data collection and analysis.

While many of the performance parameters of a packet satellite system can be validated using only two earth stations, several critical aspects require the existence of a third large station. For example, with three large stations it is possible to determine the effect of station failure or re-entry, in the presence of existing communications between the other two. With a third station, it is possible to emulate the effect of a large number of additional stations in the experiment without the need for actually providing access to additional stations. The third station will allow us to experiment with spoofing and anti-spoof techniques. Finally, with a third station, voice conferencing experiments become feasible for the first time.

Following considerable interactions with Norwegian Defense Research Establishment (and the NTA), we have a proposal from NDRE to participate in the Atlantic Satellite experiment. Under the proposed arrangement, Norway will provide the earth station equipment, up-link and 48kb terrestial facilities in return for the loan of a SIMP and gateway for the duration of the experiment. There will be no other cost to ARPA and the on-loan equipment will be returned upon cancellation of the satellite channel. We plan to begin tests with the third large earth station in CY77.

Also in CY77, we will begin to experiment with a small unattended earth terminal (UET) at COMSAT Laboratories, which is being provided by COMSAT at no cost to ARPA in return for a SIMP and gateway which will be returned at the end of the experiment. The UET is significantly less capable than the large INTELSAT IV earth stations and will only support 16 kbps in comparison to 64 kbps for the large stations.

However, the performance of the UET is characteristic of small stations in general and can be used to determine how best to incorporate a mix of earth stations on a single packet satellite channel. This capability is particularly important for DoD applications where several small remote installations must communicate with each other and with large earth stations.

The extension of the satellite program to Norway has been coordinated with OSD/ISA and we have their approval to proceed.

ACCOMPLISHMENTS:

BBN designed and developed the Satellite IMP and successfully installed it at the US and UK ground stations in the Atlantic satellite experiment. In addition, they designed and developed the gateway software (as part of the packet radio program) which is being used to interface the ARPANET to the Satellite Net.

PROPOSED EFFORT:

BBN will procure, install and checkout a SIMP and Gateway for COMSAT Laboratories, a SIMP for the Tanum earth station and a Gateway for use at NDRE. The precise configuration is given in the BBN Proposal P77-CSY-11.

If the SIMPs are procurred by BBN prior to 1 October (or shortly thereafter, if they can negotiate an extension), it will be possible to take advantage of a 25% OEM discount currently in effect with Honeywell. The funding in the MRAO assumes the 25% OEM discount. If the discount cannot be obtained, the SIMPs will cost an additional $16,735, corresponding to a 6% discount. If an ARPA Order is signed on or before 1 October (or shortly thereafter), the 25% discount should hold, as BBN will then buy the SIMPs prior to the contract in order to preserve the discount.

RELEVANCE TO THE DOD/ARPA MISSION AND FUNCTIONS:

Broadcast Packet Satellite Communications can make available, dynamically, the limited capacity of a given satellite channel over a third of the surface of the earth and in that region where it is most needed. Far more effective use of a single communication channel will be possible than could otherwise be obtained with fixed allocation techniques. This technique provides a more cost-effective system, better utilization of DoD resources and most importantly, it provides the ability to dynamically apportion the satellite capacity during crisis situations.

TRANSFER PLAN TO THE SERVICES:

Not applicable.

ARPA Order: Multiple

WORK: AC^3T

CONTRACTOR: Various

FUNDING:

CAT	AMT	PE CODE	TERM (MO)	FUND TO:
6.2	$1,696K	62708E	3	9-30-76

P. MANAGER: Various

REMARKS: FY7T funding for Incrementally Funded Contracts and In-house efforts.

Director's previous comments on the various AOs attached for information.

Eugene W. Stubbs
Program Management Officer
~~14~~ April 1976
23

AC^3T

TITLE	MANAGER	LINE	AO/AMEND	CONTRACTOR	AGENT	AMOUNT
Packet Communication Tech						
Slotted Aloha Systems	Kahn	T11101I	1956-07	U Hawaii	NASA AMES	50K
Satellite Measurement	"	T11102I	2496-05	UCLA	DSS-W	105K
SIMP Test Support	"	T111011I	3214-01	BBN	DSS-W	[illegible]
						[illegible]
Ground Radio Packet Technology						
System Design & Theory	"	T11200I	2206-07	NAC	DSS-W	72
Packet Radio Theory	"	T11201I	2496-05	UCLA	DSS-W	105
Packet Radio Repeaters	"	T11203I	2305-10	Collins Radio	DSS-W	240
On-Slotted Aloaha Experiments	"	T11204I	1956-07	U Hawaii	NASA AMES	12
Systems Integration & Testing	"	T11205I	2302-12	SRI	DSS-W	135
SE & TD	"	T11206I	2302-12	SRI	DSS-W	34
Packet Radio Control Sta Develop	"	T11203I	2935-03	BBN	DSS-W	118
Acoustic Surface Wave Tech	"	T11214I	3222-01	Texas Instru	ECOM	40
						756
System & Network Security						
Network Encryption Device Dev	Walker	T12001I	3092-03	Collins	DSS-W	103
Private Line Interface	"	T120041I	3173-01	BBN	DSS-W	33
Protection Analysis	"	T12006I	2223-14	USC	DSS-W	53
Multics Security	"	T12007I	2641-02	MIT	ESD	50
Virtual Machine Monitor	"	T12008I	2496-05	UCLA	DSS-W	60
Encryption Control Software	"	T12010I	3186-01	BBN	DSS-W	75
...370 Security	"	T120091I	3225-01	SDC	DSS-W	16
						395
C^3 Message Technology						
Advanced C^3 Message Serv Dev	"	T13003I	2223-14	USC	DSS-W	105
						105

TITLE	MANAGER	LINE	AO/AMEND	CONTRACTOR	AGENT	AMOUNT
Internetwork Host Protocols	Kahn	T15001I	2901-03	BBN	ONR	30
Internetwork Reliability	"	T15002I	3045-01	MIT	ONR	60
Intermelting Protocols	"	T15005I	2494-10	Stanford U	DSS-W	41
Integrated Packet Networks	"	T15006I	2286-07	NAC	DSS-W	35
Tenex Service	Walker	T18007I	2223 -14	USC	DSS-W	55
						211
					Total	1,696 K

NMRO

No 2278

Item 12

15 SEP 1972

MEMORANDUM FOR THE DIRECTOR, PROGRAM MANAGEMENT

SUBJECT: Systems Design of a World-wide Seismological Communications Network

References:

1. COMSAT letter to AFOSR dated 29 August 1972, Subject: Proposal for Systems Design of the World-wide Seismological Communications Network.

2. Letter OSR to ARPA dated 5 September 1972.

3. CCD Working Paper 388, 1972, Subject: A Review of Current Progress and Problems in Seismic Verification.

It is requested that $66,443 of FY73 Seismic Verification funds be transferred to the Air Force Office of Scientific Research to support a systems design study by COMSAT of a world-wide seismological communications network.

Objective

To design an economically and technically feasible satellite communication network for the purpose of providing the satellite portion of direct digital data links between selected seismic arrays and long-period seismic stations to the Seismic Array Analysis Center in Alexandria, Virginia.

Background and Technical Need

A recent working paper prepared for the CCD, Reference 3, reviews the current status of U.S. research into seismic verification of an underground nuclear test ban, identifies problem areas in that research, and describes future research approaches designed to assist in solving the identified problems. One of the research areas discussed in the paper was concerned with future seismic data communications systems and data analysis procedures.

The proposed communications system described in the CCD working paper would provide regular, but not necessary real time, transmission of processed data from individual seismic arrays or stations to an analysis center using satellite communication facilities. The current INTELSAT satellite communications network is an in-being system with world-wide coverage and ground terminals in many countries of the world. Data collected at seismic stations throughout the world would be available to all who wish to use it by intercepting the data enroute to the analysis center or extracting the raw or processed data from the analysis center data bank on demand.

Solving the problem of designing an optimum verification system which seeks to detect all events, on a world-wide basis, above a body wave magnitude of approximately 4.0 requires a good deal of operating experience. Such a system is crucially dependent on the quality of system management and communication when experience indicates there are in excess of 20,000 events in this category per year.

The work proposed by COMSAT seeks to explore the feasibility and design of communication satellite links to bring back seismic data from a world-wide seismic network to a central analysis center.

This work is an integral part of the ARPA seismic verification program.

Proposed Effort

The proposed work is a six-month effort to evaluate the communications prerequirements of a world-wide seismic network and to define the preferred configurations for all satellite communications links involved. Both technical and economic factors will be considered.

Sites to be connected initially would be the NORSAR array located at Kjeller, Norway and the eight very long period (VLP) seismic stations located outside the continental U.S. These sites are:

Charters Tower, Australia
Eilot, Israel
Chen Mai, Thailand
Kongsberg, Norway
Matsushiro, Japan
La Paz, Bolivia
Kipapa, Hawaii
Toledo, Spain

Other long-period stations and arrays under consideration will be added to the study as each location is approved.

Except for the NORSAR Array, all work in this study will be conducted through the NOAA, Albuquerque Seismological Center which is the ARPA coordinator for the world-wide VLP station experiment and is expected to be the ARPA prime agent for future arrays. Coordination with NORSAR will be handled by OSR through the Air Force Systems Command, Electronic Systems Division (ESD), the current NORSAR agent.

Based on favorable results from this study, implementation of selected communication satellite links will be proposed beginning in late FY73 or early FY74.

A parallel effort is proceeding to design and develop the data links within the U.S. and the Seismic Analysis Center data storage and analysis plans required to complete a prototype world-wide seismic data processing and analysis system.

Relevance to DoD/ARPA Function and Mission

This work is designed to develop the design of a satellite communication system which would transmit data from selected seismic stations throughout the world to a central seismic data analysis center in the United States. The U.S. technical objective for research in support of seismic verification of an underground test ban treaty is to investigate the applications of modern technology to the task of implementing a future world-wide seismic network. As one aspect of that objective, this work will study the use of world-wide satellite communications to provide the near-real time data communications proposed for the future seismic network. This work supports the technical discussions of a Comprehensive Test Ban Treaty.

Assessment of Environmental Consequences

This work involves the design of a communications system utilizing the INTELSAT communications satellite system to support data collection from a world-wide seismic network. It is expected to have a neutral effect on the environment. No Environmental Impact Statement is considered necessary for this work.

Administrative Considerations

1. Cost: $66,443.

2. Funds are available on line F14501.

3. The four tasks described in the COMSAT proposal, Reference 1, are acceptable with the following exceptions:

Design studies involving arrays other than NORSAR will be performed only with the specific prior authorization of the ARPA program manager.

Design studies involving VLP stations will be restricted to the following sties initially:

Charters Tower, Australia
Eilot, Israel
Chen Mai, Thailand
Kongsberg, Norway
Matsushiro, Japan
La Paz, Bolivia
Kipapa, Hawaii
Toledo, Spain

Design studies of other VLP sites will be initiated only with the prior authorization of the ARPA Program Manager.

4. Monthly progress reports and a final technical report are requested.

5. In Reference 2, AFOSR has agreed to serve as agent and should be so designated. NOAA will be co-monitor of the COMSAT contract. NOAA will coordinate all contacts of COMSAT personnel with Directors of VLP stations.

6. Sole Source Selection Justification is attached.

7. The proposed work has been discussed with ISA, Foreign Military Rights Office. ISA recommended that the COMSAT study be conducted through the existing NOAA agreements with the VLP station directors in each country. The COMSAT work is effectively an exploration of improved techniques to obtain data from each VLP station and does not require a new agreement.

Contacts with NORSAR on this work will be conducted through ESD as part of the current NORSAR program as an exploration of improved techniques to obtain data.

8. NSF Codes: Type of Work, B; Field of Science, 49; Performing Organization, 5.

9. Program manager will be Colonel D. C. Russell.

3 Encls
1. Ref. 1
2. Ref. 2
3. Sole Source Relevance Statement

Eric H. Willis
Director for
Nuclear Monitoring Research

COORD: Dr. Fryklund _____
Col Pearce _____
Col Dolan, IPT _____
Dr. Roberts _____
Mr. Clements _____

Prepd: Col Russell/5Sep72
NMRO/43147/hcb

A02298

PART I - GENERAL INSTRUCTIONS
SECTION A - COVER SHEET

ARPA

STANDARD FORM 26, JULY 1966
GENERAL SERVICES ADMINISTRATION
FED. PROC. REG. (41CFR) 1-16.101

J

AWARD/CONTRACT A02298

PAGE 1 OF 13

1. CONTRACT (Proc. Inst. Ident.) NO.: F44620-75-C-0092
2. EFFECTIVE DATE: 1 May 1975
3. REQUISITION/PURCHASE REQUEST/PROJECT NO.: 75-0803 AO 2298-8
4. CERTIFIED FOR NATIONAL DEFENSE UNDER BDSA REG. 2 AND/OR DMS REG. 1. RATING: DO C-9

5. ISSUED BY CODE FQ 8671
Air Force Office of Scientific Research
1400 Wilson Boulevard
Arlington, Virginia 22209
(Buyer: Johnson/PMZ/202 OX4-4942

6. ADMINISTERED BY (If other than block 5) CODE S2101A
Commander, DCASD, Baltimore
Building 22, Fort Holabird
Baltimore, MD 21219 PAS: None

7. DELIVERY FOR DESTINATION ☐ OTHER (See below) ☒

8. CONTRACTOR NAME AND ADDRESS (Street, city, county, State, and ZIP code) CODE 11891 FACILITY CODE
COMMUNICATIONS SATELLITE CORPORATION
950 L'Enfant Plaza, SW
Washington, D. C. 20024

9. DISCOUNT FOR PROMPT PAYMENT
N/A

FILE

COPY
Original property
Executed

10. SUBMIT INVOICES (4 copies unless otherwise specified) TO ADDRESS SHOWN IN BLOCK
Cognizant Defense Contract Audit Activity CODE S3910A

11. SHIP TO/MARK FOR CODE
See Section E.4.e. (2)

12. PAYMENT WILL BE MADE BY
Commander, DCASR, Philadelphia
P.O. Box 7730
Philadelphia, Pennsylvania 19101

13. THIS PROCUREMENT WAS ☐ ADVERTISED, ☒ NEGOTIATED, PURSUANT TO. ☒ 10 U.S.C. 2304 (a)(11) ☐ 41 U.S.C. 252 (c)( )

14. ACCOUNTING AND APPROPRIATION DATA
AA 9750400 1302 DB5 47B1 5T10 000000 02298 000000 503700 F03700
ARPA ORDER NO 2298 AMEND NO 8 PROGRAM CODE NO 5T10 PROGRAM ELEMENT: 62708E

RESEARCH TITLE:
"Worldwide Seismographic Communications Network"

TABLE OF CONTENTS

THE FOLLOWING CHECKED SECTIONS ARE CONTAINED IN THE CONTRACT

	SEC		PAGE		SEC		PAGE
		PART I - GENERAL INSTRUCTIONS			F	Description/Specifications	
X	A	Cover Sheet	1		G	Preservation/Packaging/Packing	
	B	Contract Form and Representations, Certifications & Other Statements of Offeror		X	H	Deliveries or Performance	8
	C	Instructions, Conditions & Notices to Offerors		X	I	Inspection & Acceptance	8
	D	Evaluation & Award Factors		X	J	Special Provisions	8
		PART II - THE SCHEDULE		X	K	Contract Administration Data	8
X	E	Supplies/Services & Prices	2-7			PART III - GENERAL PROVISIONS	
				X	L	General Provisions	9-13
						PART IV - LIST OF DOCUMENTS AND ATTACHMENTS	
					M	List of Documents & Attachments	

21. CONTINUATION OF RESEARCH PERFORMED UNDER CONTRACT TOTAL AMOUNT OF CONTRACT $ 27,585
F44620-74-C-0070 CONTRACTING OFFICER WILL COMPLETE BLOCK 22 OR 26 AS APPLICABLE

22. ☒ CONTRACTOR'S NEGOTIATED AGREEMENT (Contractor is required to sign this document and return 3 copies to issuing office.) Contractor agrees to furnish and deliver all items or perform all the services set forth or otherwise identified above and on any continuation sheets for the consideration stated herein. The rights and obligations of the parties to this contract shall be subject to and governed by the following documents (a) this award/contract, (b) the solicitation, if any, and (c) such provisions, representations, certifications, and specifications, as are attached or incorporated by reference herein. (Attachments are listed herein.)

26. ☐ AWARD (Contractor is not required to sign this document.) Your offer on Solicitation Number _____ including the additions or changes made by you which additions or changes are set forth in full above, is hereby accepted as to the items listed above and on any continuation sheets. This award consummates the contract which consists of the following documents: (a) the Government's solicitation and your offer, and (b) this award/contract. No further contractual document is necessary.

23. NAME OF CONTRACTOR See Block 8 Above
BY _____ (Signature of person authorized to sign)

27. UNITED STATES OF AMERICA 1975 JUN 26
BY _____ (Signature of Contracting Officer)

24. NAME AND TITLE OF SIGNER (Type or print)

25. DATE SIGNED

28. NAME OF CONTRACTING OFFICER (Type or print)
ABRAHAM J. COHEN

29. DATE SIGNED

PART II - THE SCHEDULE

SECTION E - SERVICES AND PRICES

0001 1. STATEMENT OF WORK: $27,585

The contractor shall furnish scientific effort during the period and at the level indicated below, together with all related services, facilities, supplies and materials, toward the design of a world-wide seismographic communication system for the purpose of bringing seismic data via satellite communication from a number of seismic arrays and/or stations distributed around the world to the Seismic Array Analysis Center in Alexandria, Virginia.

The work to be included is as follows:

a. Participate in the packet-switching experiment to be performed between the U.S. Earth Station at Etam, West Virginia, and the U.K. Earth Station at Goonhilly.

b. Coordinate the testing of SIMP and SPADE systems. SIMP refers to Satellite Information Message Processor. SPADE refers to Single channel per-carrier, Pulse code modulation multiple Access Demand assigned Equipment.

c. Coordinate the planned experiment for the packet-switching experiment to be conducted via satellite between the U.K. and U.S. Earth Stations.

d. Build and test two experimental interface units for the ARPA net. These units will be delivered to ARPA and ARPA will provide the units for use in the program.

e. Build and test an experimental data test set. The test set will be delivered to ARPA and ARPA will provide it for use in the program.

2. LEVEL OF EFFORT:

During the period of performance set forth in Section H, the Contractor will expend research effort as follows:

Level-of-Effort

Category	Man-Hours
Systems Studies (Scientific)	470

3. PAYMENT

a. The total fixed price of this contract is $27,585. Progress payments are authorized under conditions set forth in the clause "Progress Payment for Other than Small Business Concerns (1974 APR)".

b. The total fixed price shall be subject to downward only adjustment. Said adjustment will be based upon the Contractor's records of actual laboratory man-hours of effort expended in the contract period and during the precontract period. For each hour less than the prescribed level-of-effort, the contract price may be reduced $49.26. Final payment is further subject to acceptance of the final technical report. Adjustments based upon the Contractor's records of hours of effort shall be made by the Contracting Officer in consultation with the Contractor.

0002 4. REPORTS

0002AA a. MANAGEMENT REPORTS

(1) Type and Frequency of Report: At the end of each complete one month period after the work begins, a monthly Management Report will be prepared for that period. The initial reporting period will begin on the first day of the month following the effective date of the contract. Thus, Quarterly Management Reports will not necessarily fall due at the end of a calendar quarter. Reports are due 15 days after the close of the reporting period.

(2) Description of Report: The Management Report should be in letter form and, generally, not exceed three (3) pages in length. Its primary purpose is to inform ARPA management of significant events, accomplishments, and problems associated with the progress of work. The report should present a narrative summary of the work under way and should be prepared to reflect the topics outlined below. Any of the topics below may be covered by noting such comments as "none", "not applicable", or "no significant change" when appropriate. (The Management Report should not be used to document technical progress or contain technical charts, graphs or formulas. Such data belong in the Technical Reports.)

Research Program Plan. A brief statement of the program's objectives and the plan for research should be shown in this item.

Major Accomplishments. A brief description, written in non-technical terms, of any findings or accomplishments that should be brought to the attention of ARPA management. The accomplishment of major milestones or the occurrence of technological breakthroughs should be reported.

Problems Encountered. This item should include difficulties which have affected, or could affect, the progress of the work. These would include problem areas of management significance such as: personnel, facilities, contracts, funds, strikes, disasters etc. Significant problems of a technical nature should be included in brief non-technical terms.

Fiscal Status.
(a) Amount currently provided for contract.
(b) Estimated expenditures and commitments to date.
(c) Estimated funds required to complete the work.
(d) Estimated date of completion of the work (when different from that specified in the contract).

Note: When required by the ARPA Order, insert "one" or "three", "Monthly" or "Quarterly" in the spaces provided in para a(1). If no Management Report is required by the ARPA Order, insert "Not Required" after "MANAGEMENT REPORTS".

Action Required by ARPA or AFOSR. Generally, this item will entail the assistance required in resolving "Problems Encountered".

Future Plans. A brief statement of any significant change which is planned in the course of the work or any new item considered to be of interest to management.

0002AB b. TECHNICAL REPORTS

(1) Type and Frequency of Report: The type of report(s) indicated below are required.

[ ] A _____ Technical Report will be prepared at the end of each complete _____ month period. The initial reporting period will begin on the first day of the month following the effective date of the contract. Reports are due 30 days after the close of the reporting period.

[ ] At the end of each year of work, except for the final year, an Annual Technical Report will be prepared for that period. Reports are due 30 days after the close of the reporting period.

[X] 60 days after the end of the research period, a comprehensive Final Technical Report is due. Should the research effort be renewed beyond the initial year, an Annual Technical Report will automatically be required for each additional year of work, except the final year, and the Final Technical Report postponed until the end of the renewal period.

(2) Description of Report: The reports required will present a concise and factual discussion of technical findings and accomplishments during the reporting period. The report should be of technical publication quality, including appropriate subject matter references.

(3) Technical Report Summary. Each Technical Report will include a report summary. This summary, prominently identified, should normally not exceed a few pages. The purpose of the project must be specified, together with a description of important equipment purchased or developed, if any, and the conclusions reached by the contractor. The most important single feature of this summary is that it must be meaningful to readers who are not specialists in the subject matter of the contract.

The requirement for careful preparation cannot be overemphasized as this summary will often provide the basis for decisions on the continuity of a project. The contractor must recognize that his achievements are quite often surveyed by Department of Defense staff who function at a level that precludes a thorough review of detailed reports.

Note: Enter "x" in the appropriate block as required by the ARPA Order. Insert "Quarterly" or "Semi-Annual", "three" or "six" if required by the ARPA Order.

Where appropriate, references should be made to more detailed sections of the Technical Report in order to guide those who may be prepared to spend the additional time required to develop a more complete and professional understanding of the accomplishments.

This report summary should include the following information for each experiment or program:

(a) Technical problem
(b) General methodology (e.g., literature review, laboratory experiment, survey, field study etc.)
(c) Technical results
(d) Implications for further research (if any)
(e) Special comments (if any)

c. COVER PAGE INFORMATION

(1) The cover page of each Management and each Technical Report will contain the following information:

(a) ARPA Order 2298
(b) Program Code 5T10
(c) Name of Contractor
(d) Effective Date of Contract
(e) Contract Expiration Date
(f) Amount of Contract Dollars
(g) Contract Number
(h) Principal Investigator and Phone Number
(i) Program Manager and Phone Number
(j) Short Title of Work

(2) The cover page of each Management and each Technical Report will include the following citation:

Sponsored by
Advanced Research Projects Agency
ARPA Order No. 2298

(3) The cover page of each Management Report must include the following in the upper right corner:

Form Approved
Budget Bureau No. 22-R0293

d. PUBLICATIONS

(1) Publication of the results of unclassified research projects in appropriate professional journals is encouraged as an important method for recording and reporting scientific information.

(2) Each publication will contain the following acknowledgement:

"This research was supported by the Advanced Research Projects Agency of the Department of Defense and was monitored by the Air Force Office of Scientific Research under Contract No. F44620-75-C-0092."

Note: Fill in the spaces in para c(1) and (2) and d(2) with appropriate data.

e. DISTRIBUTION OF REPORTS

(1) MANAGEMENT REPORTS

(a) Three copies of each report will be submitted under a cover letter addressed to:

Air Force Office of Scientific Research
ATTN: NP
1400 Wilson Boulevard
Arlington, Virginia 22209

(b) Two copies of each report to:

Director, Advanced Research Projects Agency
ATTN: Program Management
1400 Wilson Boulevard
Arlington, Virginia 22209

(c) Two copies of each report to the AFOSR Contracting Officer.

(2) TECHNICAL REPORTS

(a) 16 copies of each report will be submitted for inspection and acceptance under a cover letter addressed to:

Air Force Office of Scientific Research
ATTN: NP
1400 Wilson Boulevard
Arlington, Virginia 22209

(b) Two copies of each report to:

Director, Advanced Research Projects Agency
ATTN: Program Management
1400 Wilson Boulevard
Arlington, Virginia 22209

(c) One copy of each report to the AFOSR Contracting Officer.

(d) Additional copies of Technical Reports (normally not to exceed 50) will be distributed as may be directed by the AFOSR program manager under separate letter.

f. DISTRIBUTION OF PUBLICATIONS

5 copies of each paper planned for publication will be submitted to the AFOSR program manager simultaneously with its submission for publication, and 5 reprints of each published paper will be submitted immediately following publication. Up to 100 additional reprints may be distributed to other addressees furnished or approved by AFOSR.

Note: Insert the appropriate office symbol in para e(1)(a) and e(2)(a). Insert the appropriate number of copies in para f, per the instructions of the AFOSR program manager.

SECTION H - PERFORMANCE

1. PERFORMANCE:

a. Research shall be conducted during the period 1975 May 1 through 1975 August 31.

b. The contractor shall use due diligence to complete this contract within the period specified; provided, however, that the time for completion of performance may be extended at the discretion of the contracting officer by modification to the contract. Any extension of time under this provision shall not, of itself, form the basis for incurring additional costs.

SECTION I - INSPECTION AND ACCEPTANCE

0002 1. REPORTS DELIVERY AND ACCEPTANCE

The reports required hereunder shall be submitted for inspection and acceptance to the addressee shown in Section E.4.e.(2)(a).

SECTION J - SPECIAL PROVISIONS

1. The principal investigator for the contract is Dr. Jorge C. Fuenzalida. No substitution will be made without the prior written approval of the Contracting Officer.

2. PRECONTRACT COSTS

The price of this contract includes expenses of $6,587 incurred on and after 15 March 1975 by the contractor in anticipation of this contract and prior to the effective date thereof. The precontract period includes 90 hours of scientific effort.

SECTION K - CONTRACT ADMINISTRATION DATA

1. PATENT COUNSEL

AFOSR/JA
Patent Counsel
1400 Wilson Blvd.
Arlington, Virginia 22209

a. The following specific clauses:

1. USE OF TECHNICAL INFORMATION SERVICES

To the extent practical, the contractor agrees to use the technical reference facilities of the Defense Documentation Center for Scientific and Technical Information, Cameron Station, Alexandria, Virginia 22314, and all other sources, whether Government or private, for the purpose of surveying existing knowledge and avoiding needless duplication of scientific and engineering effort.

2. SECURITY

If, in the conduct of the research, the contractor develops information which in his opinion might have an adverse effect on the national security if it were disclosed he should promptly notify the program manager and should not disclose the information without the prior concurrence of the contracting officer.

3. DOCUMENTATION OF SCIENTIFIC AND TECHNICAL REPORTS

A DD Form 1473 (REPORT DOCUMENTATION PAGE), completed in accordance with the instructions contained thereon, shall be included with each copy of scientific and technical reports required to be submitted under this contract.

4. RESTRICTIONS ON PRINTING (1974 JUN)

Duplication of reports, data or other written material, if required, is authorized provided that the material produced does not exceed 5,000 production units of any page and that items consisting of multiple pages do not exceed 25,000 production units in the aggregate. The aggregate number of production units is to be determined by multiplying pages times copies. For purposes of this paragraph a production unit is one sheet, size 11" x 17" or less (10-3/4" x 14-1/4" maximum image), one side only, one color. Duplication of material in excess of the quantities cited above shall not be accomplished without express prior written authorization from the contracting officer. These restrictions do not preclude the writing, editing, preparation of manuscript or reproducible copy of related illustrative materials if required as a part of this contract. They do not apply to the printing or duplicating required by contractors for their own use in responding to the terms of this contract.

5. RIGHTS IN DATA (1967 DEC)

The rights obtained by the Government in technical data are set forth in the Rights in Technical Data clause incorporated in the contract, and nothing elsewhere in this contract or in any documents incorporated by reference in this contract shall be construed as in any way altering such rights except as restricted by the express terms, if any, of this contract as to data called for and furnished for provisioning purposes only.

6. ABSTRACT OF NEW TECHNOLOGY

The contractor agrees to submit an Abstract of New Technology describing each item reportable as a subject invention under the Patent Rights clause. The abstract shall be considered a part of the technical disclosure of each reportable item and may be prepared by the originator (inventor). The abstract will be in reproducible condition on 8½ by 11-inch bond. A 1-inch space will be left blank at the top (short side) of each sheet. The abstract will contain:

(i) Title. A short meaningful title specifically identifying the nature of the item.

(ii) Graphics. Any graphics which might aid in illustrating the item and how it functions (illustrated by drawings, sketches, photographs, numbers, and descriptive names, if possible).

(iii) Description. Sufficient information to enable a person skilled in the art to determine quickly, from a cursory inspection, the principal structural elements and function as well as the results afforded thereby.

(iv) Source. Inventor's name, company, organization or institution, address, and contract number.

(v) Publication. Identification of the date and identity of any public use or publication of such item made by or known to the contractor, or of any contemplated publications by the contractor, including but not limited to published reports, patent applications, or journal articles.

(vi) Notice. Add the following warning at the bottom of the first page of the Abstract:

"This document was prepared under the sponsorship of the Air Force. Neither the US Government nor any person acting on behalf of the US Government assumes any liability resulting from the use of the information contained in this document or warrants that such use will be free from privately owned rights."

7. DELAYED DELIVERY OF ABSTRACTS OF NEW TECHNOLOGY

Whenever the contractor is authorized under the Patent Rights clause of this contract to file a United States patent application claiming a "Subject Invention," and elects to do so within the time provided in such clause, the contractor may delay delivery of the Abstract of New Technology until such time as the contractor delivers the completed disclosure or a copy of the patent application as required by the Patent Rights clause.

8. DELAYED DISSEMINATION OF ABSTRACTS OF NEW TECHNOLOGY

When the contractor, if authorized by the Patent Rights clause of this contract, has elected to file a domestic and/or foreign patent application, the Government may, upon request of the contractor, delay dissemination of any Abstract of New Technology for a period not to exceed one year. In exceptional circumstances, additional delay may be authorized upon a showing of good cause.

b. The following clauses of the Armed Services Procurement Regulation (ASPR), incorporated herein by reference:

ASPR Paragraph	Clause Title and Date
7-103.1	DEFINITIONS (62 FEB)
7-103.6	TITLE AND RISK OF LOSS (68 JUN)
7-103.8	ASSIGNMENT OF CLAIMS (62 FEB)
7-103.10(b)	FEDERAL, STATE AND LOCAL TAXES (71 NOV)
7-103.12(a)	DISPUTES (58 JAN)
7-103.13(a)	RENEGOTIATION (59 OCT)
7-103.16(a)	CONTRACT WORK HOURS AND SAFETY STANDARDS ACT-OVERTIME COMPENSATION (71 NOV)
7-103.18(a)	EQUAL OPPORTUNITY (72 AUG)
7-103.19	OFFICIALS NOT TO BENEFIT (49 JUL)
7-103.20	COVENANT AGAINST CONTINGENT FEES (58 JAN)
7-103.21(b)	TERMINATION FOR CONVENIENCE OF THE GOVERNMENT (73 APR)
7-103.23	NOTICE AND ASSISTANCE REGARDING PATENT AND COPYRIGHT INFRINGEMENT (65 JAN)
7-103.26	PRICING OF ADJUSTMENTS (70 JUL)
7-103.27	LISTING OF EMPLOYMENT OPENINGS FOR VETERANS (73 SEP)
7-104.3	BUY AMERICAN ACT (64 MAY)
7-104.9(a)	RIGHTS IN TECHNICAL DATA AND COMPUTER SOFTWARE (74 NOV)
7-104.9(h)	TECHNICAL DATA-WITHHOLDING OF PAYMENT (74 NOV)
7-104.9(l)	IDENTIFICATION OF TECHNICAL DATA (75 MAR)
7-104.9(p)	RESTRICTIVE MARKINGS ON TECHNICAL DATA (75 MAR)
7-104.14(a)	UTILIZATION OF SMALL BUSINESS CONCERNS (58 JAN)
7-104.15	EXAMINATION OF RECORDS BY COMPTROLLER GENERAL (71 MAR)
7-104.16	GRATUITIES (52 MAR)
7-104.17	CONVICT LABOR (74 APR)
7-104.20(a)	UTILIZATION OF LABOR SURPLUS AREA CONCERNS (70 JUN)
7-104.21(a)	LIMITATION OF WITHHOLDING OF PAYMENTS (58 SEP)
7-104.23(a)	SUBCONTRACTS (74 APR)
7-104.35(a)	PROGRESS PAYMENT FOR OTHER THAN SMALL BUSINESS CONCERNS (74 SEP)
7-104.36(a)	UTILIZATION OF MINORITY BUSINESS ENTERPRISES (71 NOV)
7-104.39	INTEREST (72 MAY)
7-104.40	COMPETITION IN SUBCONTRACTING (62 APR)
7-104.41(a)	AUDIT BY DEPARTMENT OF DEFENSE (74 APR)
7-104.77(f)	GOVERNMENT DELAY OF WORK (68 SEP)
7-104.82	PAYMENT OF INTEREST ON CONTRACTORS' CLAIMS (72 MAY)
7-302.2	PAYMENTS (59 JUN)
7-302.3	STANDARDS OF WORK (59 JUN)
7-302.4(b)	INSPECTION (59 JUN)
7-302.9(a)	DEFAULT (69 AUG)
7-302.21	AUTHORIZATION AND CONSENT (61 JAN)
7-302.23(b)	PATENT RIGHTS (LICENSE) (69 DEC)
7-304.1	CHANGES (65 JUN)
7-404.6	REPORTS OF WORK (60 JUL)
7-2003.41	ORDER OF PRECEDENCE (73 APR)
7-104.18	PRIORITIES, ALLOCATIONS, AND ALLOTMENTS (74 APR)

Item 13 file A022

COMSAT LABORATORIES

FINAL REPORT

Operation of a SIMP/SPADE Interface Unit (SSI) for Use in the ARPANET Satellite Experiment

May 2, 1975

A Final Report Submitted to the
Advanced Research Projects Agency

1400 Wilson Boulevard
Arlington, Virginia

Under Contract no. F44620-74-C-0070

Jorge C. Fuenzalida
Terrestrial and Systems Interface
Principal Investigator

Stanley Rothschild
Terrestrial and Systems Interface

Table of Contents

	Page No.
1. Introduction	1
2. System Description	2
2.1 System Operation	3
2.2 Interface Signal Characteristics	6
3. Operation of the Interface Unit (SSI)	10
4. Data Test Set	13
5. System Configuration	14
6. Conclusions	15

List of Illustrations

Figure No.	Title	Page No.
1	System Configuration	17
2	Partial Block Diagram of Modified SPADE Transmit Synchronizer.	18
3	Bit Stream @ 64 KB/s	19
4	Signal Flow - Block Diagram	20
5	SIMP/SPADE Interface Partial Schematic	21
6	SIMP/SPADE Interface Unit Timing Diagram	22
7a, b, c	Signal Exchange between DTS, SSI, and XMIT SYNC.	23
8	Integrated System	24

List of Tables

Table No.	Title	Page No.
I	Configurations Available	16

1. Introduction

This final report will describe the work performed by COMSAT under ARPA contract No. F44620-74-C-0070, Order No. 2298. The purpose of the contract was to assist ARPA in extending the ARPANET to countries overseas from where seismic data would be returned to SDAC. The transmission technique to be employed would be packet switching via satellite, once the technique had been proven through an experimental program. It was towards the implementation of this experimental program that the effort was directed during the contract period.

A meeting was held in London in January, 1975, with representatives of ARPA, Bolt Beranek and Newman, COMSAT, and the British Post Office. Its purpose was to discuss the implementation schedule of the proposed packet-switching experiment between the U.S. and U.K. The date of July 1, 1975, was set as a target date for the start of transmission between the earth stations at Etam, W. Va., and Goonhilly, U.K.

This report is divided into six sections. The first is the introduction, the second will describe the system operation including the operation of the SPADE channel units. The third section will describe the operation of the interface unit, and the fourth section the operation of the data test set. Section 5 shows the system integration, and Section 6 is the conclusions.

The two major accomplishments under this contract were the design and construction of breadboard models of the SIMP/SPADE Interface Unit (SSI) and a Data Test Set (DTS). The SSI is installed between the SIMP and the SPADE channel units. It is used for controlling the SPADE channel carrier turn-on and turn-off times relative to the transmission of data from the SIMP, provide clocking pulses from the SPADE channel unit to the SIMP for both the transmission and reception of data, and to perform other

functions necessary for the proper operation of the SPADE channel unit in a burst transmission mode. The DTS can be used to perform a number of functions, among them are the measurement of Bit Error Rates, testing of the modified SPADE channel units for proper operation, and monitoring of a standby channel unit to ensure operational readiness.

2. System Description

Figure 1 shows the system configuration as it will exist at the earth station. Data to be transmitted will enter the earth station via terrestrial network, terminating in a Western Electric Company model 303C, 50 KB/s Data modem. At earth stations not serviced by ATT, Internation Standard V.35 modems would be employed. The data is then fed from the modem directly to the SIMP. The SIMP re-forms the data into packets suitable for transmission through the INTELSAT Atlantic Region Primary satellite employing the burst mode capability of the SPADE terminal channel units. All receive data from the satellite is passed by the channel unit to the SIMP where it is reassembled into its original format and sent to its destination via the terrestrial network as described above.

Since the INTELSAT SPADE terminal provides PCM coded voice circuits at a rate of 56 KB/s using burst mode 4ϕ PSK transmission, it was proposed by COMSAT to modify SPADE channel units for the experimental program and operate into the SPADE satellite transponder, rather than develop a new satellite modem and transmission system.

It should be noted here that packet data system operation requires that two SPADE channel units at each earth station be modified, since all stations in the network will share the same carrier frequency through the satellite. In normal SPADE system

operation, a single channel unit is used to provide a full duplex voice circuit through the satellite with send and receive carrier frequencies separated by 18.045 MHz. However, in the satellite packet switching concept which has been developed by ARPA, all stations must transmit and receive on the same frequency. Therefore, two channel units are required, turned to frequencies 18.045 MHz apart. While this configuration seems wasteful of equipment, it does have the advantage of providing a complete spare set of transmit and receive units.

In the following paragraphs, the operation of the SIMP, SSI, and SPADE channel units will be described. A detailed description of the operation of the SSI is presented in Section 3.

2.1 System Operation

The SPADE system was originally designed to convert 4.0 kHz terrestrial voice band analog signals to 56 KB/s PCM data using 7 bit encoding at an 8 kHz sampling rate. For packet data operation the SIMP will substitute data for PCM voice and will transmit its data at 56 KB/s to the SPADE channel unit, and receive its data also at 56 KB/s. The SPADE PCM voice CODEC is bypassed and the data fed directly into the Transmit Synchronizer and received directly from the Receive Synchronizer. Figure 2 is a simplified block diagram of the modified Transmit Synchronizer.

During normal operation, data will be transmitted in burst, where each burst can vary in length from as little as 100 bits to more than of 1000 bits of data. The time between bursts will also vary. The exact format is dependent upon the particular system protocols which are determined by the software to be programmed into the SIMP.

When the SIMP is ready to transmit a packet of data, it sends a CARRIER ON(GO) signal designated as GOSIG, to the interface unit. The SSI generates two signals from the GOSIG, viz., CARRIER ON/OFF and CARRIER GATE* which are passed to the SPADE Transmit Synchronizer. The former signal is used to turn ON the SPADE channel carrier prior to the transmission of data. The latter starts the CARRIER ON SYNCHRONIZER which generates a series of pulses referred to as the PREAMBLE and Start of Message (SOM) sequences. These data bits are used in reception for carrier recovery, bit timing recovery, and synchronization. In addition, a Start Preamble pulse ($\overline{SP}$) is also generated and sent to the SSI. This pulse causes a gate within the SSI to open, allowing 56 kHz transmit clock pulses to be sent back to the SIMP. Data is sampled out of the SIMP synchronous with the clock pulses. The first data bit is coincident with the $\overline{SP}$ pulse. The data is sampled out of the SIMP at 56 KB/s and fed to the Transmit Synchronizer in the SPADE channel unit. When the last data bit has been sampled out of the SIMP, this GOSIG goes off, turning off the gate in the SSI, and stopping any further clock pulses from being sent to the SIMP.

The data which are fed to the channel unit is written into two 112 bit read/write memories. As the data is written into the first memory at 56 KB/s, the Preamble and SOM are generated and transmitted to the channel modem at a bit rate of 64 KB/s. Once the first memory has been filled, data is then written into Memory 2. While data is being written into Memory 2, the data is read out of Memory 1 at a bit rate of 64 KB/s. When Memory 1 is empty, Memory 2 will start to read out, and Memory 1 will have data written into it. The SOM is inserted before Memory 1 starts to write out its data. The timing is such that 224 bits of data at 56 KB/s is equal in transmission time to 256 bits of data at 64 KB/s, (224 bits of data plus 32 bits SOM = 256 Bits.) This sequence is shown in Figure 3. The 64 KB/s serial data is converted

to two parallel 32 KB/s data streams for modulation of the carrier; 4ϕ-PSK modulation is used with channel spacing of 45 kHz, and a noise bandwidth of 38 kHz.

The transmitted carrier must remain on until all data has been read out of the 112 bit memories. This is accomplished in the SSI by employing two sets of counters. The first counts the number of data bits sampled out of the SIMP and passed on to the channel unit. This counter operates at 56 KB/s. The second counts the number of data pulses read out of the memories and counts at 64 KB/s. When the second counter reaches the same number as the first, the carrier is turned off. The second counter is gated off during the 0.5 msec when the SOM is inserted into the bit stream, and gated on during the 3.5 msec while the data are read out of the memories.

When the data are received from the satellite, the inverse process is performed, i.e., the 4ϕ-PSK carrier is demodulated into two 32 KB/s parallel bit streams, reformed into a 64 KB/s serial bit stream, read into two 112 bit memories at 64 KB/s, and then written out of the memories at 56 KB/s. The SOM is stripped out of the bit stream during this operation. The operation of the Receive Synchronizer is controlled by the CARRIER ON gate generated in the receive synchronizer. This gate allows the Read/Write memories to operate only as long as the carrier is present. To accommodate timing delays within the receive synchronizer, a 33 bit delay in addition to the 112 bit delays in the read/write memories, the transmitted carrier must remain ON sufficiently long to ensure all memories have been cleared of received data. This requires the transmitted carrier to be ON for approximately 2.5 msec after all data has been cleared out of memories in the transmit synchronizer. The design has been verified by performing numerous data transmission tests using the data test set, interface unit, and the SPADE terminal at the Etam W. Va., earth station. The

carrier is held on for this additional time by presetting the 56 KBit counter in the SSI to 140. More extensively testing will be performed to determine the minimum time the carrier must remain on to ensure no loss of data.

2.2 Interface Signal Characteristics

Figure 4 is a diagram showing the signals which are exchanged among the SIMP, SSI, and the SPADE channel unit. The interface between the terrestrial network and the SIMP is a digital data modem which passes 50 KBit data and clock to the SIMP, where it is stored, divided into packets, and then transmitted to the SPADE channel unit.

The signal levels from/to the SIMP on the terrestrial and the SPADE side are compatible with the Western Electric Company 303C modem. On the SPADE side a change of levels is necessary for the signals to be compatible with the DTL/TTL levels of the SPADE channel unit. This level conversion is accomplished within the interface unit. The WECO 303C modem levels are defined as:

a. binary "1", control "OFF", or "marking" signal is represented by a current less than 4 ma into 100 ohms;

b. binary "0" control "ON", or "spacing" signal is represented by a current greater than 23 ma into 100 ohms.

The signal levels to and from the SPADE channel unit are DTL/TTL logic, and are defined as:

a. logical "1" is a positive voltage greater than 2.4 volts;

b. logical "0" is a positive voltage less than 0.4 volts.

A total of six signals are exchanged between the SIMP and the SSI. They are:

a. GOSIG--a binary "0" gate from the SIMP to the SSI indicating when data are to be transferred from the SIMP to the SPADE channel unit. The gate goes off, i.e., returns to binary one after the last data bit has been sampled.

b. XMIT Data--the 56 KB/s data to be transmitted. Binary "0"'s or "1"'s are sent from the SIMP to the SSI.

c. 56 kHz XMIT CLK--clock pulses used to synchronize the sampling of data from the SIMP. The clock pulses originate in the SPADE Transmit Synchronizer, and are converted to 303C levels in the SSI. The data pulses are changed during the positive transition of the clock pulse; i.e., transition from binary "1" to binary "0", and sampled by the SSI during the negative going transition of the clock pulse. The clock pulse width is 2.23 μsec.

d. RCVE Data--The 56 KB/s data received by the SSI from the SPADE Receive Synchronizer and transmitted to the SIMP after conversion to 303C levels.

e. 56 kHz RCV CLK--clock pulses used to synchronize and transmit the Receive Data out of the SPADE Receive Synchronizer. The clock pulses are generated in the Receive Synchronizer Unit and are continuously transmitted to the SIMP through the interface unit. Conversion to 303C levels is performed in the SSI.

f. Crosspatch--a binary "0" gate which provides loopback testing of the transmitted data. During the crosspatch or loopback test, there is no transmission to the satellite.

The signals exchanged between the SSI and the SPADE channel units are:

a. Carrier On/Off--a logical "0" gate used to turn on the 45.9875 MHz IF carrier in the 4ϕ PSK modem.

b. Carrer Gate--a logical "1" gate to turn on the Carrier ON Synchronizer in the Transmit Synchronizer module, where the $\overline{\text{Start}}$ $\overline{\text{Preamble}}$ pulse is generated. It is transmitted from the interface unit to the SPADE channel unit.

c. $\overline{\text{Start}}$ $\overline{\text{Preamble}}$--a logical "0" pulse which is used to start sending clock pulses to the SIMP. This pulse goes from the channel unit to the interface unit.

d. XMIT Data--the 56 KB/s data to be transmitted. It is received from the SIMP and converted to TTL levels before it is sent to the SPADE channel unit.

e. XMIT Clock (56ϕ_1)--56 kHz clock pulses sent from the SPADE channel unit to the interface unit. Used as timing signals within the interface unit. One clock pulse is transmitted for each datum bit.

f. RCV Data--received 56 KB/s data transmitted from the SPADE channel unit to the interface unit where it is converted to 303C levels before being sent to the SIMP.

g. RCV Clock--56 kHz clock pulses used to synchronize the received data being transmitted to the SIMP. The clock pulses are converted to 303C levels before they are sent to the SIMP.

h. 64 kHz Clock ($64\phi_1$) and Memory Output Disable (MOD)--the $64\phi_1$ clock and MOD are used in the counter circuits for determining when all data has been transmitted from the SPADE Transmit Synchronizer.

A common ground will be established between the SSI and SPADE channel units.

The signal characteristics of the PCM Data and clock pulses (items d, e, f, and g) within the Transmit and Receive Synchronizers, are as follows:

a. 56 KB/s Transmit Data are TTL levels, non-return to zero (NRZ) with high level of zero, low level of one.*

b. T.56 kHz Transmit Clock pulses are TTL levels, low-to-high rising edge with high level pulse width of 2.23 μsec. The leading edge of the transmit data is delayed from the low-to-high rising edge by 50 to 100 nsec.

c. 56 KB/s Receive Data are TTL levels, NRZ, with high level of one, low level of zero.

d. R.56 kHz RCV Clock pulses are TTL levels, low-to-high rising edge with high level pulse width of 2.23 μsec. The leading edge of the receive data is delayed from the trailing edge (i.e., high-to-low falling edge) of the clock pulse by 100 to 200 nsec.

*This is the inverse of the logic levels specified earlier.

In addition to the above signals, a crosspatch or loopback signal is available for test purposes. Insertion of the crosspatch signal (a logical "0" at J2-11 of the Receive Synchronizer) will cause the transmit synchronizer output to be connected to the receive synchronizer inputs in the same channel unit. This will provide test information to determine whether the data are being correctly received from the SIMP, transferred to the SPADE channel unit, and transferred back to the SIMP without errors. During this mode of operation, operational data are not transmitted to nor received from the satellite.

3. Operation of the Interface Unit (SSI)

In the following description of the operation of the SSI unit, signals are fed to the unit from the SIMP and from the Transmit Synchronizer in the SPADE channel unit. Since the operation of the Data Test Set is similar to the SIMP, the discussion will be limited to the exchange of signals between the SIMP, SSI, and SPADE channel unit. References will be made to Figure 5, SSI Partial Schematic, and Figure 6, Timing Diagram. Line numbers on the timing diagram correspond to signal points ①, ②, ③, etc., on the interface schematic.

When the SIMP is ready to transmit data, the GOSIG is sent from the SIMP to the interface unit. Since the relationship between the GOSIG and the 56 kHz clock pulses are arbitrary, FF-1 in the interface unit is used to synchronize the GOSIG with the clock, to prevent the possible loss of synchronization at other points within the circuit.

The delayed pulse, GOSIG*, is applied to FF-4 and the 8 bit Shift Register S/R-1 through FF-3. This second flip-flop, FF-3, is to insure synchronization of GOSIG* with the 56 kHz clock. The $\overline{Q}$ output of FF-4 is applied to the Data (D) input of FF-5, which is synchronized with the 64 kHz clock. The Q output of FF-5,

is applied to the Transmit Synchronizer as the Carrier ON/OFF, and will control the ON/OFF time of the 46 MHz carrier in the 4ϕ PSK modem. The output of the 8 bit shift register is applied to the Carrier ON Synchronizer module in the Transmit Synchronizer. One output of the Carrier ON Synchronizer, the $\overline{\text{Start Preamble}}$ ($\overline{\text{SP}}$) pulse is fed to the interface unit. Once the $\overline{\text{SP}}$, 7, is applied to FF-2, the 56 kHz clock pulses, 10, will be transmitted to the SIMP. The first clock pulse to be transmitted is coincident with the $\overline{\text{SP}}$ pulse. The purpose of the 8 bit shift register is to allow the carrier to be turned on well in advance of the transmission of data. This is to allow some time for the receive modem at the receive station to lock onto the carrier prior to the detection and demodulation of data. In the breadboard model, the 8 bit shift register provided 142 μsec of delay, and approximately 115 μsec between leading edges of the Carrier ON/OFF and Carrier Gate* signals. Higher delay time can be obtained by adding additional shift registers, should this prove necessary.

The approach used to control the turn-off time of the carrier is to count the actual number of data bits sampled from the SIMP, and then count the number of data bits transmitted from the SPADE channel unit. The bottom portion of Figure 5 is a simplified schematic of the counter/decoder system.

In this arrangement, two counters are required: one to count the clock pulses sent to the SIMP, and the other to count clock pulses at the transmit bit rate of 64 KB/s. This second counter is gated with the Memory Output Disable signal from the transmit synchronizer. It is high during 224 clock pulses, (3.5 msec.), after which it goes low for 32 clock pulses, (0.5 msec.). It is during this short time that the SOM is inserted into the transmitted bit stream. Each counter is composed of three four-stage counters connected in series. This will allow for a maximum count of 4096 bits.

The decoding section is composed of 12 exclusive NOR gates which feed a 13 input NAND gate. The output of the NAND gate will be high until both inputs to each exclusive NOR gate are equal. This will occur only when the 64 Kb counter has reached the identical count as the first counter (SIMP clock pulses, 14). The output of the NAND gate is held high between GOSIG pulses by the output of FF-2 ($\overline{Q}$); i.e., when the input levels to each exclusive NOR are low. The output pulse (16 μsec wide), 14 will clear FF-4, which in turn will cause the CARRIER ON/OFF to go high at the next 64 kHz clock pulse. As mentioned in Section 2, the carrier must remain on in order to insure that all data will clear the registers in the Receive Synchronizer upon reception. This is true whether data are received from the satellite or through loopback tests. In order to insure that the carrier is kept on sufficiently long, the 56 kHz counter must be preset to 140. This corresponds to 2.5 msec. at 56 KB/s. Therefore, the decoder ouput will remain high until the 64 KBit counter has reached a count of N+140, where N is the number of data bits sampled from the SIMP.

Figure 7(a), 7(b), and 7(c) are photographs taken with the Data Test Set and SPADE Transmit Synchronizer operating with the SSI. Each figure shows the following signals from top to bottom:

a) 56 kHz clock
b) GOSIG
c) CARRIER ON/OFF
d) CARRIER GATE*
e) $\overline{SP}$
f) Gated 56 kHz clock to SIMP
g) Data (from Data Test Set)

As it was mentioned in the introduction of this report, the Data Test Set can be employed to simulate the operation of

the SIMP. The GOSIG and Data traces were taken from the Data Test Set. The 56 kHz clock and $\overline{SP}$ were taken from the transmit Synchronizer, and the remaining signals from the interface unit. In Figure 6(b) it can more easily be seen that the first clock pulse to the SIMP does occur coincident with the $\overline{SP}$ pulse. The data generated by the particular pseudo-random sequence generator (PRG) in the Data Test Set, i.e., $X^{10}-X^{3}-1$, supplies the first seven data pulses as 1's, the next three as "0's", followed again by four 1's, etc. The data is high prior to the $\overline{SP}$ pulse as a result of initializing the PRG prior to transmission or data. This is seen to be datum bit no. 1. In Figure 6(c) it can be seen that the GOSIG goes off after the last data pulse has been sent out. Also, the CARRIER ON/OFF is held low for 4.7 msec after the GOSIG goes off to insure complete data transmission through the Receive Synchronizer. This time increment also allows for approximately seven additional receive clock pulses to be sent to the SIMP after the last data bit.

4. Data Test Set

The Data Test Set (DTS) was specifically developed for use in conjunction with the SPADE Transmit and Receive Synchronizers and the SIMP/SPADE Interface Unit. It's purpose is to enable the earth station personnel to test the modified SPADE channel units and the SSI for proper operation, for monitoring the off-line channel unit for stand-by readiness, and to measure bit error rate performance of the SPADE channel unit in burst mode transmission.

The test set has a transmit and receive section which operate independently of each other. The transmit section receives its clock timing pulses from the SPADE Transmit Synchronizer, and the receive section obtains its clock timing pulses from the SPADE Receive Synchronizer. This allows the transmit and receive sections of the DTS to operate independently of each other. Hence, tests

can be performed between two or more earth stations in the network, in the same manner as one earth station may test and checkout its own equipment on a loopback basis.

It is possible in the DTS to vary the time between bursts from as little as 15 μsec up to approximately 5.8 msec. Each burst transmits a fixed pseudo-random bit pattern of 1000 data bits. The pattern is generated by the polynominal $x^{10}-x^{3}-1$. This polynomial will generate a random pattern of 1023 bits before it repeats its sequence. However, only data bits in the sequence from bit no. 2 through no. 1001, inclusive, are transmitted in each burst.

The receive section operates independently from the transmit section. Detection of data is performed through a unique word detector. The output pulse from the detector causes a second pseudo-random generator to generate the exact bit pattern that was generated in the transmit side. Comparison on a bit-by-bit basis is used to determine the bit errors that occur. A second counter is used to count the number of bursts that were received. Knowing the number of bursts and the number of bit errors generated, the bit error rate can be determined.

Indicator lights are used to show when data is being transmitted and when the receiver has acquired and locked-on to the received data. Switches are available to start and stop data transmission, and to stop the readout counters for bit error rate calculations.

5. System Configuration

Figure 8 shows how the SIMP, SSI, DTS, and SPADE channel units will be connected into an integrated system at the earth station. In this configuration two SSI's are required, one for operation with the SIMP and the on-line transmit and receive

synchronizers, and the others SSI for operation with the DTS and off-line transmit and receive synchronizers. The switch matrix is provided so that in the event of a failure of any unit in the system, switch-over to the standby units can be accomplished with a minimum interruption of service. Provisions have been made for performing loopback tests from the SIMP, DTS, or SPADE channel units.

During normal operation the SIMP will be connected to transmit synchronizer A and receive synchronizer A' through the SSI_A. The DTS will operate with transmit synchronizer A' and receive synchronizer A through SSI_B. The connection of the SIMP, DTS, and SSI's can be interchanged through the operation of the switch matrix. If loopback tests are to be performed, then all signals from one channel unit will be passed through one interface unit to the SIMP, while all signals from the second channel unit will be passed to the DTS via the other interface. Table I shows all the possible combinations that can be obtained.

During loopback testing, there will be no transmission to or from the satellite from the terminal. It should be noted that if loopback tests are to be performed by the SIMP, then the DTS will also be connected into a loopback mode.

6. Conclusions

The breadboard models of the SIMP/SPADE Interface Unit and Data Test Set have been built and tested with the SPADE terminal at Etam, W. Va., and has operated satisfactory. No tests have yet been performed with the SIMP connected into the system, and hence, no prediction can be made as to whether proper signal levels and timing will be achieved without some redesign or adjustment of the interface unit. However, it is believed that any changes that may be required will be minimal, and little or no delay should occur in

the schedule for the planned packet switching experiment between the U.S. and U.K. planned to begin July 1975.

TABLE I. Configurations Available

Function	SIMP	DTS	SSI_A	SSI_B	Channel Unit A		Channel Unit A'	
					Xmit	Rcve	Xmit	Rcve
Normal	X		X		X			X
		X		X		X	X	
	X			X		X	X	
		X	X		X			X
Loopback	X		X		X	X		
		X		X			X	X
		X	X		X	X		
	X			X			X	X

X indicates units connected together.

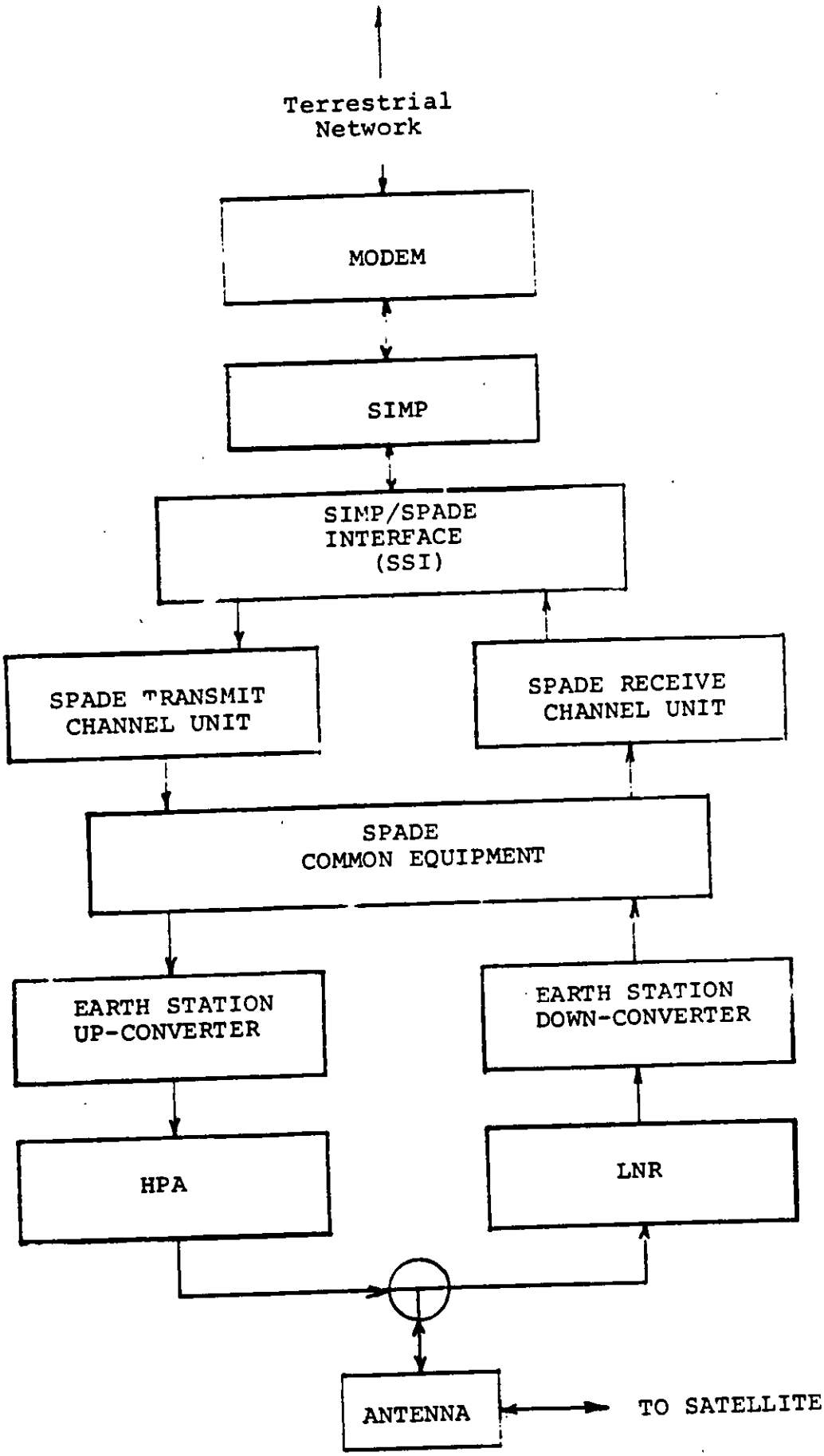

Figure 1 SYSTEM CONFIGURATION

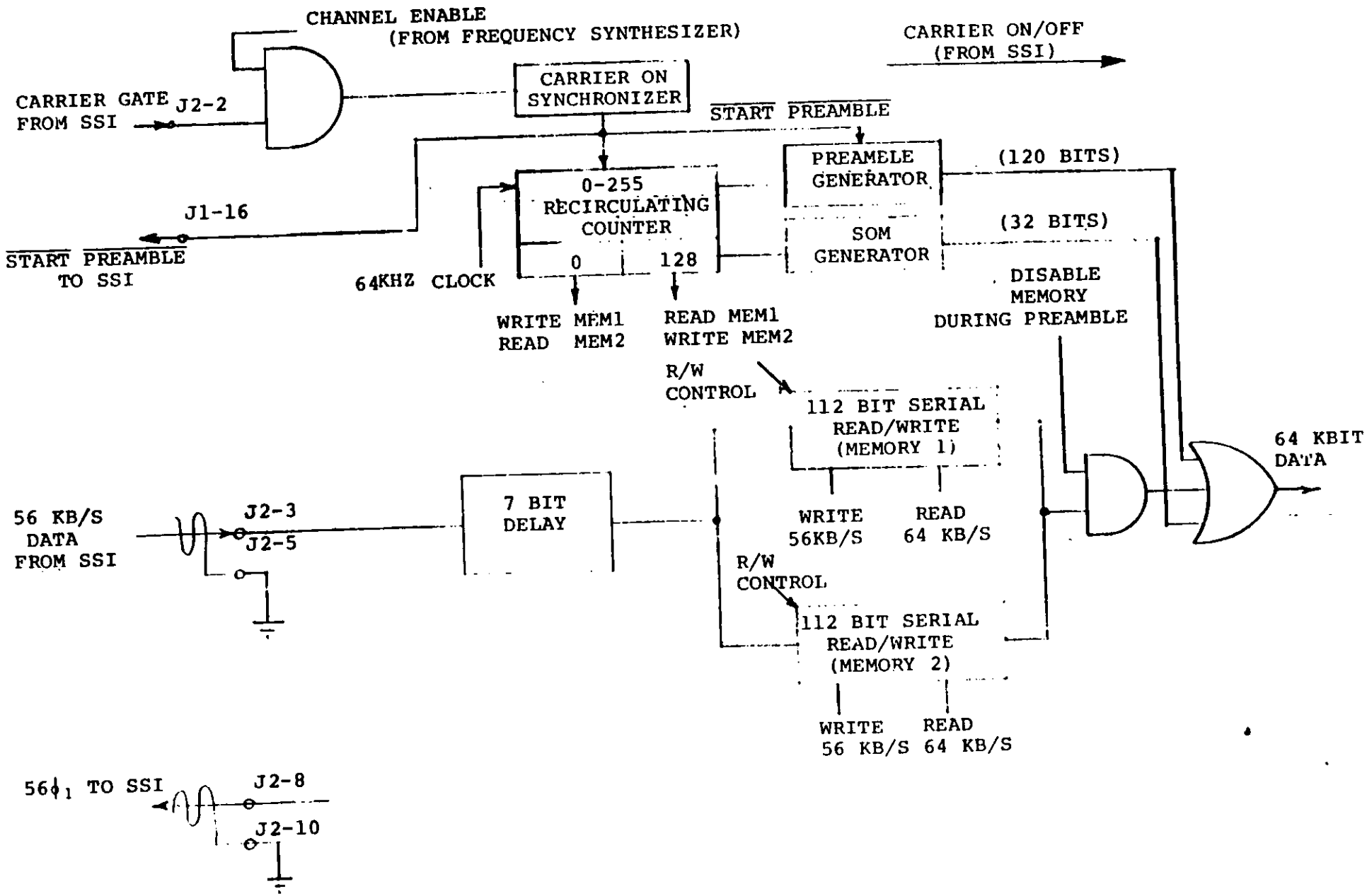

Figure 2 PARTIAL BLOCK DIAGRAM OF MODIFIED SPADE TRANSMIT SYNCHRONIZER

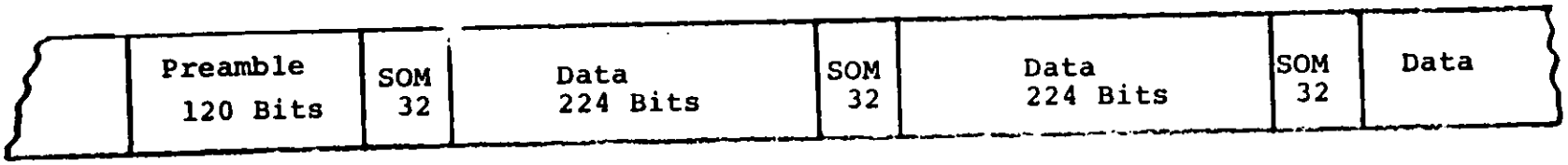

Figure 3 Bit Stream @ 64 KB/s

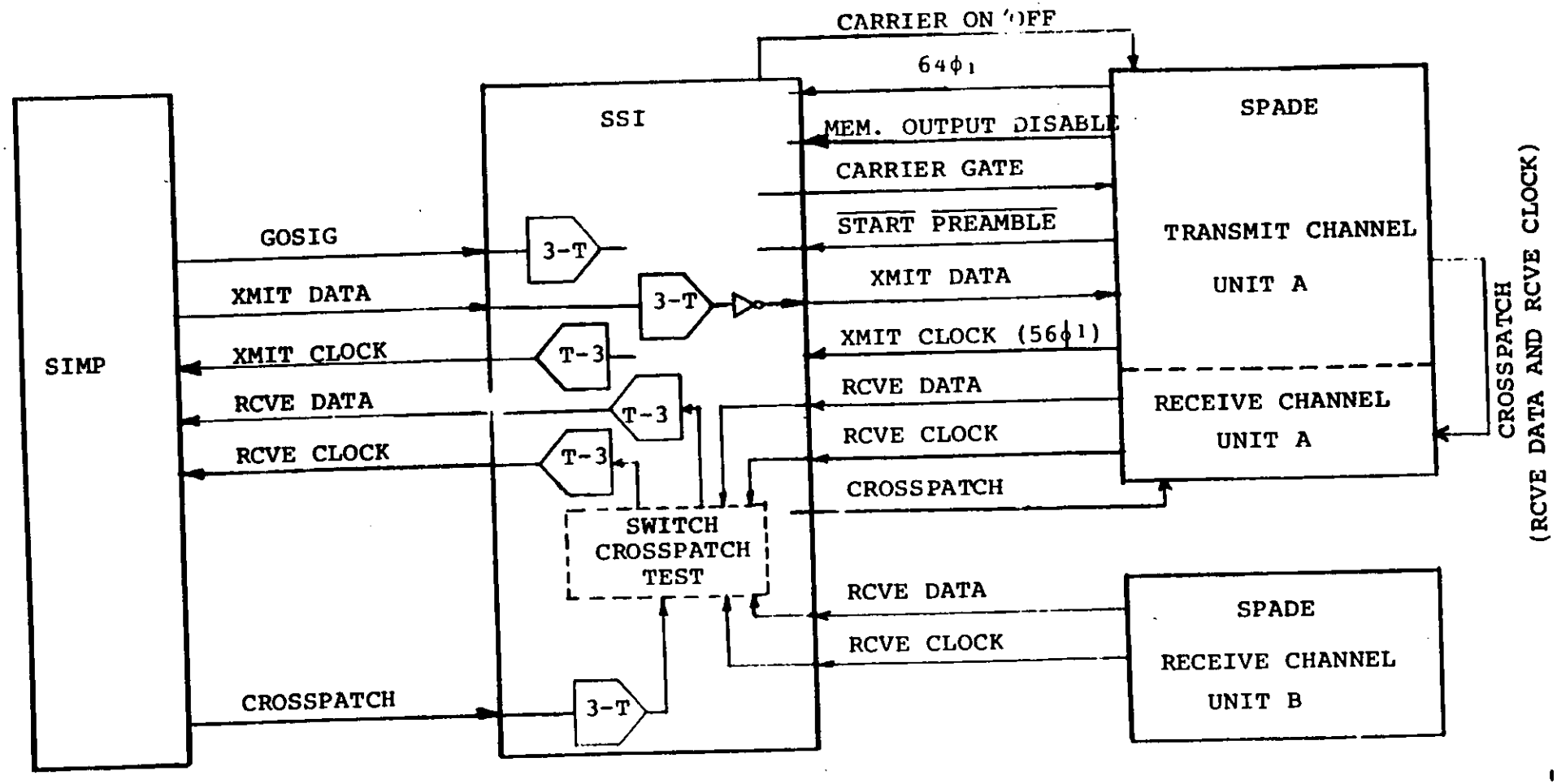

NOTE: SYMBOL — 3-T — 303 TO TTL CONVERSION

— T-3 — TTL TO 303 CONVERSION

Figure 4 SIGNAL FLOW - BLOCK DIAGRAM

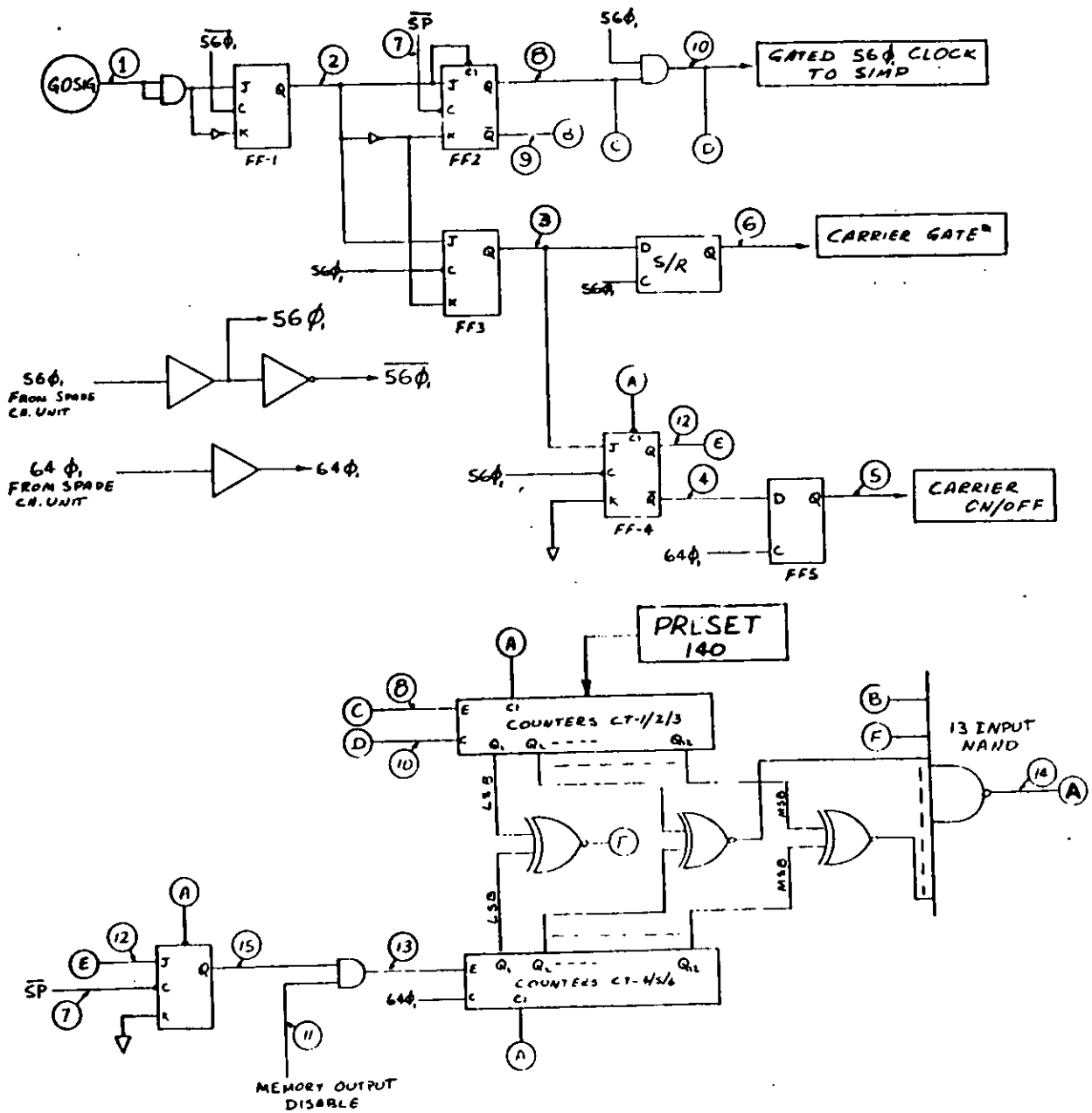

Figure 5 SIMP/SPADE Interface Partial Schematic

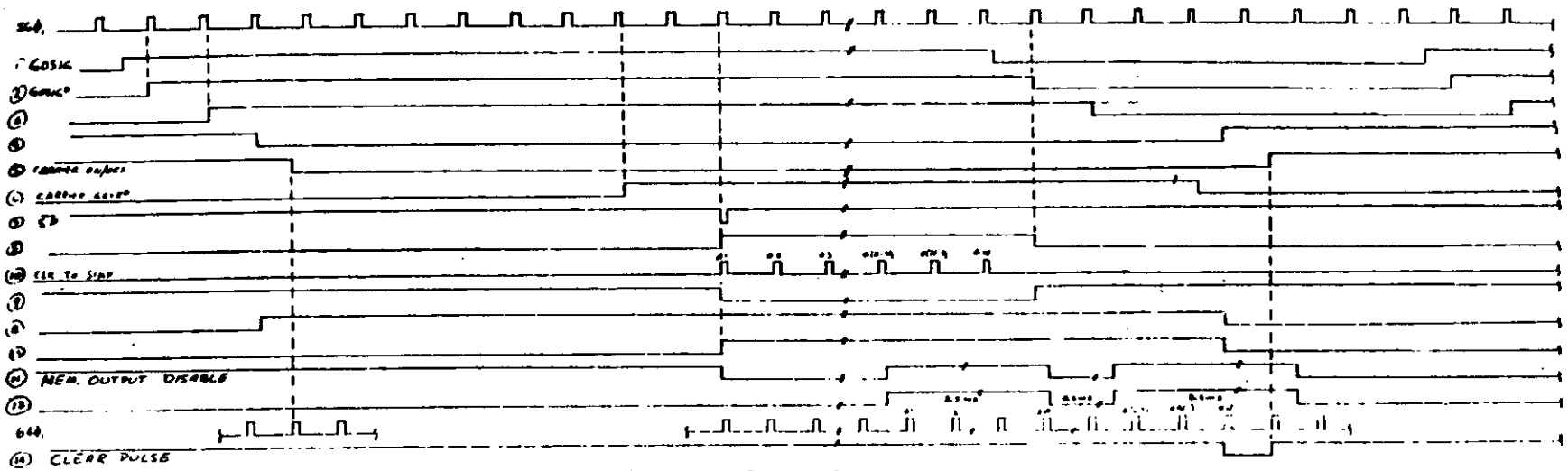

Figure 6 SIMP/SPADE Interface Unit
Timing Diagram

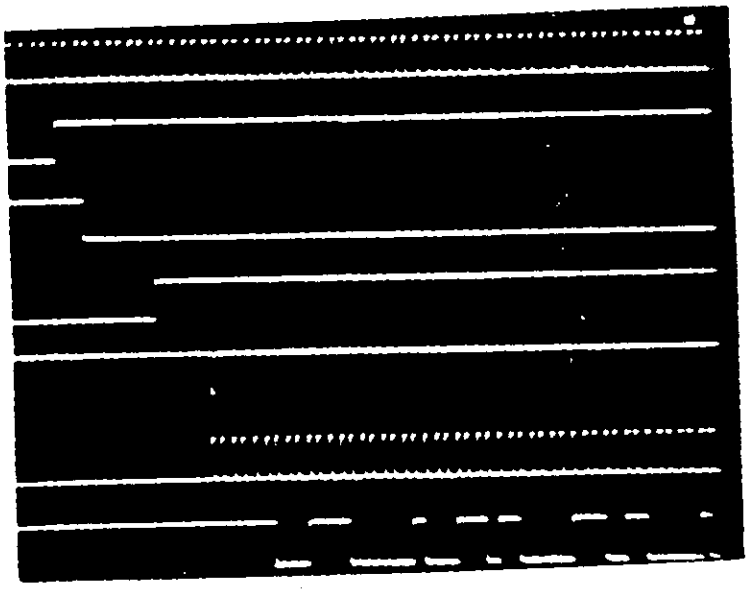

Fig. 7(a)

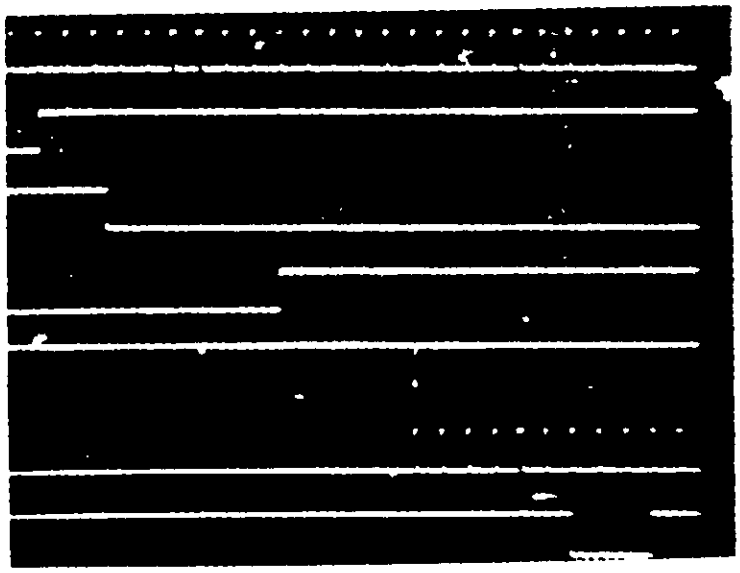

Fig. 7(b)

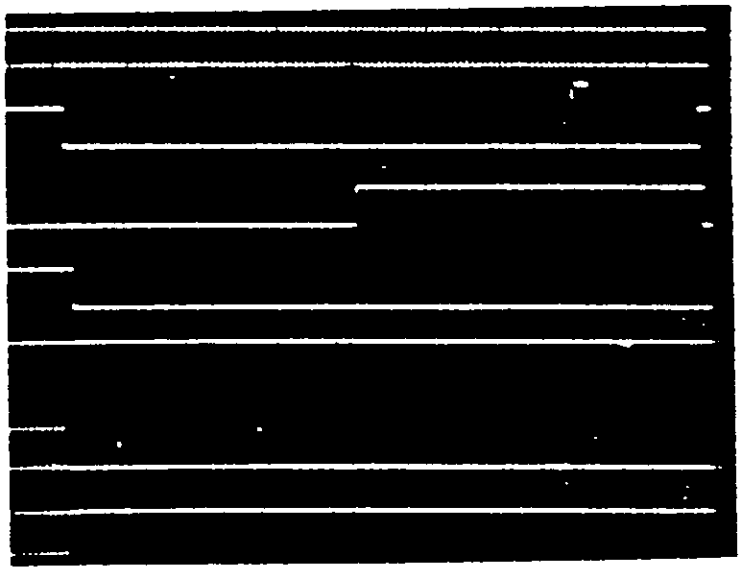

Fig. 7(c)

Figure 7 Signal Exchange between DTS, SSI, and XMIT SYNC.

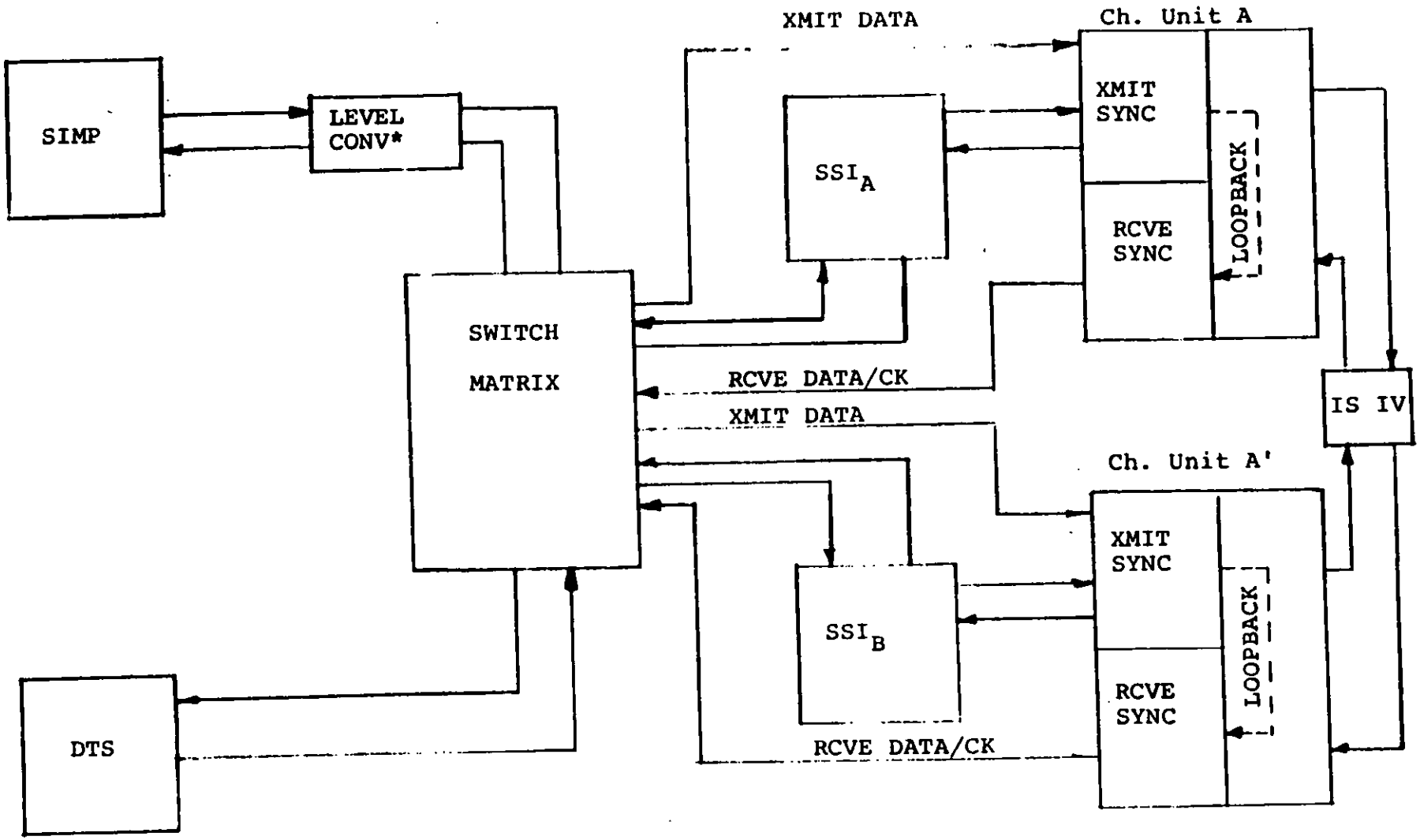

*Conversio from 303C to TTL and TTL to 303C

Figure 8 Integrated System

Item 14

ADMINISTRATIVE SERVICE REQUEST	VOUCHER NUMBER	REQUISITION NUMBER 1000-937
	DATE 1 JULY 1976	DELIVER TO ARPA 1400 Wilson Blvd. Arlington, Va. 22209

DIVISION Advanced Research Projects Agency

REQUISITIONING OFFICER

FUND CITATION 97T0400.1311 2302/PTT10 1229 S49156 DDR047

TYPED NAME AND OFFICE OF COORDINATOR Eugene W. Stubbs/PMO/694-1888

SIGNATURE OF FISCAL OFFICER

SIGNATURE OF COORDINATOR Eugene W. Stubbs

STOCK OR ITEM NUMBER	DESCRIPTION OF ARTICLES OR SERVICE	QUANTITY ORDERED	QUANTITY SHIPPED	UNIT	PRICE	AMOUNT
	FYTQ increment due for Contract # DAHC15-73-C-0187 with SRI.					$169,000
	(ARPA Order #2302/12 applies.)					
	This requirement is included orpprovided for in the financial plan for FYTQ. The accounting classification will be: SEE FUND CITATION ABOVE. This statement is not assurance of fund availability.					
	Eugene W. Stubbs EUGENE W. STUBBS Program Management Officer					

POSTING NOTATIONS	RECEIVED BY	DATE RECEIVED	TOTAL AMOUNT
			$169,000

DD FORM 1 DEC 55 1262

☆ U.S. GOVERNMENT PRINTING OFFICE: 1967—[illegible]

ACST

Chronology of AO Actions

Multiple

DATES		DATES	
7-2-42	MRAO Rec'd in PM		AO Ret'd from Dir to Tech Office thru PM
	Resubmission (MRAO) Rec'd in PM	5/11	Resubmission Rec'd in PM
5/3	Fw'd to Dir. for signature		Resubmission to Director
5/4	Ret'd from Dir's Office		Ret'd from Dir's Office

MR. BRAUNSTEIN IPK for DRC at conference

MR. LOOFT

DR. HEILMEIER

I'd like to see us try to get service agents for packet radio, where handling the security work

this IPT [illegible]

19 MAY 1976

Signed by [illegible]

This ARPA Order/ARPA Order Amendment has been signed and sworn to by the undersigned.

Date

Program Management Officer

ARPA Order: Multiple

WORK: AC^3T

CONTRACTOR: Various

FUNDING:	CAT	AMT	PE CODE	TERM (MO)	FUND TO:
	6.2	$1,696K	62708E	3	9-30-76

P. MANAGER: Various

REMARKS: FY7T funding for Incrementally Funded Contracts and In-house efforts.

Director's previous comments on the various AOs attached for information.

Eugene W. Stubbs
Program Management Officer
~~14~~ April 1976
23

AC^3T

TITLE	MANAGER	LINE	AO/AMEND	CONTRACTOR	AGENT	AMOUNT
Packet Communication Tech						
Slotted Aloha Systems	Kahn	T11101I	1956-07	U Hawaii	NASA AMES	50K
Satellite Measurement	"	T11102I	2496-05	UCLA	DSS-W	105K
SIMP Test Support	"	T111011I	3214-01	BBN	DSS-W	74K
						229
Ground Radio Packet Technology						
System Design & Theory	"	T11200I	2286-07	NAC	DSS-W	72
Packet Radio Theory	"	T11201I	2496-05	UCLA	DSS-W	105
Packet Radio Repeaters	"	T11203I	2305-10	Collins Radio	DSS-W	240
On-Slotted Aloaha Experiments	"	T11204I	1956-07	U Hawaii	NASA AMES	12
Systems Integration & Testing	"	T11205I	2302-12	SRI	DSS-W	135
SE & TD	"	T11206I	2302-12	SRI	DSS-W	34
Packet Radio Control Sta Develop	"	T11208I	2935-03	BBN	DSS-W	118
Acoustic Surface Wave Tech	"	T11214I	3222-01	Texas Instru	ECOM	40
						756
System & Network Security						
Network Encryption Device Dev	Walker	T12001I	3092-03	Collins	DSS-W	103
Private Line Interface	"	T120041I	3173-01	BBN	DSS-W	38
Protection Analysis	"	T12006I	2223-14	USC	DSS-W	53
Multics Security	"	T12007I	2641-02	MIT	ESD	50
Virtual Machine Monitor	"	T12008I	2496-05	UCLA	DSS-W	60
Encryption Control Software	"	T12010I	3186-01	BBN	DSS-W	75
IBM370 Security	"	T120091I	3225-01	SDC	DSS-W	16
						395
C^3 Message Technology						
Advanced C^3 Message Serv Dev	"	T13003I	2223-14	USC	DSS-W	105
						105

TITLE	MANAGER	LINE	AO/AMEND	CONTRACTOR	AGENT	AMOUNT
Internetting Internetwork Host Protocols	Kahn	T15001I	2901-03	BBN	ONR	20
Internetwork Reliability	"	T15002I	3045-01	MIT	ONR	60
Intermelting Protocols	"	T15005I	2494-10	Stanford U	DSS-W	41
Integrated Packet Networks	"	T15006I	2286-07	NAC	DSS-W	35
Tenex Service	Walker	T18007I	2223 -14	USC	DSS-W	55
						211
					Total	1,696 K

TYMSHARE

Item 15

Data Services Division
10261 Bubb Road
Cupertino, California 95014
Telephone: 408/257-6550

November 30, 1972

Dr. Robert Kahn
Information Processing Techniques
Advanced Research Project Agency
Arlington, Virginia

Dear Dr. Kahn:

This letter is a confirmation and follow up of our previous conversations concerning the interconnection of ARPANET and TYMNET.

The experimental connection that was used during the recent ICCC'72 demonstration has created much interest in the area of network crossover technology. Since this will undoubtedly be of great value to future data services, it seems logical to continue the experiment.

Since the software already exists to facilitate the interconnection of a TIP at NASA Ames and a TYMSAT at the same location it would be a small undertaking to re-install the software which would allow us to continue research in this vital area.

I have had interest expressed to me directly for the continued interconnection of the two networks from ARPA, NASA/AMES, SRI, Stanford, BB&N, and NLM.

I sincerely believe that by continuing this experimental interconnection of the two networks (ARPANET and TYMNET) that we can gain considerable useful knowledge in the network crossover area having to do with computer-to-computer, computer-to-terminal and terminal-to-computer technology.

If you agree with my logic would you please have the proper software installed in the NASA/AMES TIP so that we can continue this research.

Sincerely,

Max P. Beere

Max P. Beere
Director of Telecommunications Systems

/so

DARPA SIG 1182
September 1981

Item 16

Draft

INVESTIGATION OF INTERNET WORKING TECHNIQUES

FOR PACKET SWITCHED COMMUNICATIONS

by

Peter T Kirstein

ABSTRACT: This proposal outlines a five year project investigating problems in interworking between packet switched networks. The proposal is for a no-cost contract with the US Defence Advanced Project Agency (DARPA), and is in support of another collaboration project between DARPA and the UK Royal Signals Research Establishment (RSRE).

1. INTRODUCTION

University College London has been carrying out networking research under an agreement with DARPA since 1973. The first contract (N00074-C-0280) was originally from 1973 to September 30 1975. Under this contract, UCL measured the performance of a number of parameters unique to the international network connection to the US ARPANET. We connected in a number of host computers by a then unique front-end technique, and resolved many problems of a management kind in order to enable international usage via public common carrier equipment. Finally we set up a mechanism for supporting collaborative usage between research groups in the US and the UK. This work was described in a number of reports in particular Ref. 1. Eventually this contract was renewed for one further year to put the usage side on a firm footing, and prepare for the Packet Satellite Experiment, and for internetwork connection experiments. This work has been described in Ref.2. From October 1 1976 there was a new contract N00077-G-0005. Under this contract UCL has done substantial measurement work on the Atlantic Packet Satellite Experiment, has participated actively in the internetwork activities, and has made preparations for a simple version of a facsimile service which could run over Arpanet and Satnet.

This work is described in detail in Refs 3-6, but a brief summary is given in Section 2. Partially as a result of the UCL activity, an agreement was made between the UK MOD and DARPA on a longer term project between the two bodies. The relevant details of this agreement are discussed in Section 3. One aspect of that agreement is the continued access of the UK to Arpanet and Satnet facilities. It has been agreed mutually that UCL is the natural location to provide this access. In Section 4 we describe briefly the type of research work we expect to do during 1982 and 1983, both in order to complete this work and to provide the access which is part of the DARPA MOD agreement. DARPA-furnished equipment will be required. In Section 5 we list the equipment currently in the UK or scheduled to be provided under the agreement. Finally, in Section 6, we outline the effort and deliverables which we expect to provide as part of this agreement.

2. RECENT UCL RESULTS

A detailed discussion of UCL results are given in Refs 1-6. One very significant activity was the user level measurements of Satnet which we have performed. These measurements have been described in Ref. 4 but also in a number of other papers, e.g. Refs 7-14. The measurements identified serious deficiencies in the performance of the gateways, which have led to their redesign.

A second activity has been the interconnection of Arpanet, Satnet and a UK experimental packet switched service,(EPSS). This connection was provided in a sufficiently robust way that it became standard for the majority of UK users to access Arpanet either through EPSS or from another star network based on the Rutherford Laboratory. Little usage came directly via the Public Switched Telephone Network (PSTN) to the TIP. As a result of this work we have also identified a number of serious problems and mismatches of protocol. Many of these hinge around connecting together systems which were not designed for this type of interconnection. An example is the problem with full duplex working and not using local echo. The problems are rooted in the fact that certain of the operating systems (e.g. Tops 20 and Tenex) are used heavily in Arpanet, though they were designed for local usage. Their use over low delay networks like Arpanet is still tolerable; their use over commercial packet switched networks or satellite ones may become inefficient, costly and inconvenient. The types of problem and difficulty encountered by the interconnection of EPSS and Arpanet affected also the performance of Satnet. Although this work is described in Refs 3 and 4, a paper on it is given as Ref. 15.

As a result of the practical problems encountered, we have made a detailed theoretical analysis of the connection of packet switched networks. Some of the general considerations on the different levels of interconnection are described in Refs 16 and 17. A clear theoretical problem identified has been the variation in performance caused by different flow control, fragmentation and buffering strategies. Analyses of these phenomena are given in Refs 18-21.

The PTTs have now standardised on the X25 virtual call protocol for access to public data networks. We have been developing X25 interfaces to Satnet in such a way that users on the British X25 net will be able to access Arpanet via Satnet (Ref. 22). At present we have demonstrated our capabilities by connecting terminals at the UK Royal Signals Research Establishment (RSRE) via an access protocol which is X25 level 2. Software to support the full X25 to virtual call transformations at all the relevant levels of protocol, will be developed during the next phase of the UCL work.

the networking facilities

We have undertaken a significant amount of packet facsimile transmission over Arpanet and Satnet. This work again has been described in Refs 3 and 4, but more complete papers on the work are in Refs 23 and 24. In this work we showed that it is possible to combine facsimile transmission and the existing text message services over Arpanet in a uniform fashion.

Later work has involved the set up of an experimental facsimile store and forward service between UCL, COMSAT Laboratories and ISI. This service will be extended to other sites (including DARPA) when the relevant equipment is installed. All three sites have been active in the specification and implementation of the relevant procedures. We have also investigated the interactive editing of facsimile in the context of multimedia messages. An overview description of this work is given in Ref. 25. We have participated actively in the preparation for TCP-based services in the Internetwork activity. This work has not yet come into full service use, and will be discussed further in Section 4. As preparation for this work, we have extended the MOS operating system to a Virtual machine (Ref. 26), adapting an RSRE development. We have also implemented a significant amount of X25 software (e.g. Refs 27-29). Some of the hardware/software has been delivered to Bolt, Beranek and Newman, Comsat and the Defense Communication Agency for DARPA-related work.

3. THE DARPA-MOD RESEARCH AGREEMENT

Partly arising out of the UCL work, which has also been supported by the UK Ministry of Defence (MOD), a number of examples of collaboration have been developed between the UK MOD and DOD. For instance, there is extensive collaboration between the UK Atomic Weapons Research Establishment (AWRE) and the US Seismic Data Analysis Centre (SDAC) on the Analysis of Seismic Events. Another collaboration has been between the UK RSRE and its contractors, in connection with the DOD/DARPA work on the Ada language for real-time computing. Another UK MOD group has collaborated with the US Defence Readiness Command (DARCOM) on the use of message systems for administrative purposes. Finally, RSRE has connected its packet switched network (PPSN) to the DARPA Internetwork Catenet using Internet Protocols.

In view of the increasing requirements for DOD-MOD collaboration, an agreement has been made between RSRE and DARPA under the auspices of the Technical Cooperation Programme (TTCP). The important aspects of that agreement for the purposes of this proposal are the following:

(i) The agreement covers the period July 1979 to June 1984.

(ii) MOD will pay for their up link share of the 64 kbps multidestination half-duplex Satnet link between the UK, US and Norway.

(iii) MOD will provide sufficient financial support for Professor Kirstein and his team at UCL to continue active R & D on topics of mutual interest to both RSRE and DARPA, and to operate the Arpanet TIP, Satnet gateway etc.

(iv) The UK will interface the RSRE PPSN to Satnet via a gateway, and will make one or more general purpose machines available as hosts on the RSRE PPSN or other UK networks.

(v) The US will continue to provide and support the hardware and software of the various Arpanet and Satnet components in the UK.

(vi) The US will continue to provide access to various host computers and networks via Arpanet in the US.

In view of this agreement between MOD and DARPA it is necessary to continue a subsidiary arrangement between DARPA and UCL.

4. PROPOSED UCL ACTIVITIES 1981-86

The nature of the UCL activities must be expected to change between now and 1986. One aspect of it will clearly be to continue to provide the support necessary to MOD to ensure access to the Satnet facilities. A number of reports have been written on how UCL is proposing to provide this access. A fairly good description is given in several reports (Refs 30-33). Here we have identified the various protocol translations that must be achieved, and the service provisions required. As a result of the technical analysis we have then proposed specific implementation strategies for terminal (Ref. 34), File and Message Transmission (Ref. 35). In the process of planning, we have identified key problems such as access control (Ref. 36) and addressing.

Central to the UCL approach is the use of a local high speed Ring network for interconnecting the various wide area networks. A description of the past UCL work with this network is described in Refs 37 and 38. There has been a very substantial effort in ring protocols, and in consideration of how the Ring will be used in this context. The plans for connecting in SATNET are described in Ref. 39. Basically the various wide-area networks will all be attached to the UCL Rings, and processing elements on the Rings will provide the protocol conversion, message and access control services.

In addition to providing straight-forward service access, we would expect to participate actively in the research aspects of what should be provided. So far the gateway provided to SATNET is the datagram gateway running Arpanet Host/Access and X25 level 2. In view of the potential interest in inter-operability between civil and defence networks we will provide also a Virtual Call X25 level 3 based Gateway in addition to the datagram internet gateway to Satnet. Because the US defence networks will use versions of the Internet Protocol TCP, while this is unlikely to happen for the public data networks, one aspect of the UCL virtual call gateway will be a translation between TCP and a simple transport service above X25. We also intend to look at the compatability of different terminal protocols, and implement appropriate mappings between the Arpanet Telnet and those on the Public Data Networks. We note this class of problems is also of some interest to the US Defense Communication Agency. Some of their recent study contracts have involved interoperability of Defense and Public networks.

We expect to continue to participate in measurement activities to understand and improve the performance of the Internet Catenet. An example of our measurement plans is given in Ref. 40.

interoperability of defense and public networks.

We expect to continue to participate in measurement activities to understand and improve the performance of the Internet Catenet. An example of our measurement plans is given in Ref. 44.

The use of a high speed local network as the interconnection system leads to a number of important considerations on routing and reconfiguration capability. To achieve the full potential, it is necessary to have good models both of the theoretical and current connectivity of the Catenet systems. This connectivity is a multi-level entity, because mere physical connection may not achieve high level service connectivity. It is necessary that appropriate gateway functions be available also. Areas to be studied include reconfiguration, name and route servers, dynamic update of name server tables, and distribution of the information needed in a consistent form.

ICL has recently started participation in a new Ku-band satellite project, (related to the DARPA/NSA Wideband effort), involving earth stations at ICL and a number of other US sites (Ref. 41). The ICL Earth Station will also be attached to the Rings at ICL. We expect to investigate how this network could be integrated into the total Catenet system for experimental services.

The subject of multi-media Document Processing continues to be a major ICL interest. We expect to extend our activity to include graphics, facsimile, videotex and eventually voice into the multi-media document processing accomplished locally. We expect also to participate with the appropriate DARPA sponsored groups to extend our current facsimile service into a full-blown multi-media one. Our activity will have one different aspect from the other DARPA sponsored ones. We will continually bear in mind compatibility problems in the context of the developing international standards on Documents Transmission (e.g. Videotex and Teletex).

We have both a digital facsimile device and a bit map display, and will expect to employ these in this aspect of the project. Voice facilities we would expect to continue to receive from DARPA, in part to assure compatibility.

5. ARPA SUPPORT

In order to continue to provide the access agreed between DARPA and MOD, and to perform the research work described in Section 4, continued and additional loan of equipment from DARPA, and access to DARPA - supplied resources will be required. The present and additional facilities in the UK on loan from DARPA are shown in Table 1:

Schedule of Equipment	Date Shipped
1 Honeywell 316 TIP	July 1973
1 Honeywell 316 SIMP	July 1975
1PDP 11/35 Gateway	July 1976
1 LSI-11 Port Expander	August 1979
1 LSI-11 Terminal Concentrator	September 1980
1 LSI-11/23 Minigateway	October 1981
1 C30 IMP	March 1982
1 C70 or MC 68000 Gateway	October 1982

Table 1. Schedule of Equipment on Loan from DARPA

This figure also shows the equipment currently proposed for delivery later in 1981 and 1982. We would expect our actual requirements to change over the course of the next few years, as demanded by the collaborative agreement and change in the DARPA programmes in which we participate.

Although we use many UK computer resources in our work, it is also necessary to use US resources. This is partly because much of the software developed is done in different research groups working on the DARPA programmes, and interchange and mutual extension of the software are absolute requirements. We would expect continued access to computing resources in the US to be provided in accordance with the strict limits imposed hitherto.

This agreement should extend over the period until November 30 1986 unless the MOD-DARPA agreement is terminated before that time, and DARPA therefore wishes to terminate the agreement.

6. UCL DELIVERABLES

At several points in the UCL programme we are developing hardware and software to meet requirements which exist both at UCL and RSRE, and also in other sites supported as part of the DARPA programmes. Where appropriate we will provide the UCL developed hardware free. At other times we would provide the drawings to be manufactured or furnish the hardware at cost. It is difficult to be more explicit at this stage. If smaller numbers are required of particular hardware boards we would clearly supply them, but if it became desirable to provide them in sizeable quantities for a substantial cost, this would clearly be beyond the means of a research group such as ours.

In particular we would be prepared to provide sufficient versions of our present facsimile interface board to allow the prototype facsimile service to be extended, and to furnish the appropriate software. If required we would expect also to furnish the software for the X25-Internet protocol conversion to other sites if they so want it. It is understood that the above would be for purposes of the US Government only, and would not preclude commercialisation for other purposes by the British Technology Corporation.

7. PERSONNEL

As part of our agreement with RSRE, we would expect to have three people employed on work relative to this proposal at least up to the end of 1984. Our personnel beyond that period would depend on the renewal of the agreement with RSRE.

This agreement does not propose any compensation from DARPA to UCL, with two exceptions. First, we would expect the loan with no charge to UCL of the US equipment mentioned in Section 5. Second, our participation in the DARPA Internet and other working groups will usually be at the invitation of DARPA.

8. REPORTS

We would expect to continue to provide short quarterly reports and more detailed annual reports, and to make available as in the past copies of technical reports and publications produced by the INDRA group to the people specified by DARPA.

9. REFERENCES

1. Kirstein, P.T. : UCL Arpanet Project Annual Report, October 1974-December 1975, TR27, Dept. Computer Science, University College London, 1976.

2. Kirstein, P.T. : UCL Arpanet Project Annual Report for 1976, TR 34, ibid, 1977.

3. Kirstein, P.T. : UCL Arpanet Project Annual Report for 1977, TR 48, ibid, 1978.

4. Kirstein, P.T. : UCL INDRA Project Annual Report for 1978, TR 56, ibid, 1979.

5. Kirstein, P.T., UCL INDRA Project Annual Report for 1979, TR 66, ibid, 1980.

6. Cole, R. et al : MOD Group Annual Report for 1980, TR 68, ibid, 1981.

7. Treadwell, S.W. : Measurement Methods in Packet Switched Networks, TR 65, ibid 1980.

8. Treadwell, S.W. et al : Gnome Database Documentation, INDRA Note 744, ibid, 1979.

9. Treadwell, S.W. : Gnome Users Guide, TR 41, ibid, 1979.

10. Treadwell, S.W. : SATNET Measurement Results, INDRA Note 745, ibid, 1979.

11. Treadwell, S.W. et al : A High Level Measurement Tool, EUROCOMP 78, London, pp 35-49, 1978.

12. Jones, R.G. : SATNET Throughput II, INDRA Note 1119, 1981.

13. Jones, R.G. : SATNET Throughput, INDRA Note 1046, 1981.

14. Jones, R.G. : A Catenet Probe Implementation, INDRA Note 1108, 1981.

15. Higginson, P.L. and Z.Z. Fisher : Experience with the Initial EPSS Service, EUROCOMP 78, London, pp 581-600, 1978.

5. Cerf, V.G. et al : Issues in Packet-Network Interconnection, Proc. IEEE, 66,11, 1386-1408, 1978.

Bennett, C.J. : The Design and Implementation of Transnetwork Systems, TR 62, Dept. Computer Science, University College London, 1980.

Edge, S.W. : Comparison of the Hop-by Hop and Endpoint approach to network Interconnection, Proc. Int. Symp. Flow Control in Computer Networks, ed. J.L. Grange, North

Holland, 359-377, 1979.

19. Edge, S.W. et al : A survey of End-to-End Retransmission Techniques, SIGCOM, 1-18, October 1973.

20. Edge, S.W. et al : A Stochastic Model of an End-to-End Packet Switched Connection with Optimistic Storage Allocation at the Receiver, Proc. Distributed Computing Symposium, Paris, pp 227-235, 1981.

21. Bennett, C.J. : The Overheads of Transnetwork Fragmentation, to be published in Computer Networks, 1982.

22. Kirstein, P.T. et al : SATNET Application Activities, Proc. National Telecommunications Conf., Session 45, 1979.

23. Yilmaz, S. and Kirstein P.T. : UCL Experiments in Facsimile Transmision Using Database Management Facilities in Arpanet, Proc Eurocomp, ONLINE, pp 789-820, 1978.

24. Kirstein, P.T. and Yilmaz, S. : Facsimile Transmission in Message Processing Systems with Data Management, ICCC, Kyoto, pp 717-725, 1978.

25. Treadwell, S.W. : Facsimile Development at UCL, INDRA Note 1150, 1980.

26. Cole, R. : Design for a Virtual MOS on UNIX, INDRA Note 1062, 1981.

27. Hall, R.H. : A description of Variations between X25 Networks, INDRA Note 1093, 1981.

28. Jones, R.G. : Initial PSS and RSRE Line Card performance Measurements, INDRA Note 1145, 1981.

29. Jones, R.G. : X25 Level 3 Support for the RSRE Line Card, INDRA Note 1143, 1981.

30. Kirstein, P.T. : Trans Atlantic Collaborative Computing, IUCC '80, 2, 3, 161-166.

31. Kirstein, P.T. : The Transition Requirements during 1981 for UK-US Services, INDRA Note 1037, 1981.

32. Braden, R.T. et al : Development of UK/US Network Services at University College London, INDRA Note 1101, 1981.

33. Bennett, C.J. : Future Mail System Developments, INDRA Note 1124, 1981.

34. Braden, R.T. : Design of UCL Terminal Protocol Convertor, INDRA 1159, 1981.

35. Bennett, C.J. et al : Network Independent File Transfer at University College London, INDRA Note 888, 1980.

36. Cole, R. et al : Routing and Access Control in UK-US Services, INDRA Note 1114, 1981.

37. Kirstein, P.T., et al : University College London Activities in the Cambridge Ring, IFIP 6th Local Networks Meeting, Zurich, 1980.

38. Kirstein, P.T. : Computer Network Activities at University College London, Proc. ICCC '80, pp 570-577, 1980.

39. Cole, R. et al : The Satnet Access Machine, INDRA Note 1113, 1981.

40. Jones, R.G. : Suggestions for Future Work on the MOD Measurement Programme, INDRA Note 1147, 1981.

41. Kirstein, P.T. : The UNIVERSE Project, INDRA Note 1083, 1981.